Dual Gauge Wheel/Spindle Update

2- and 3-Section Pull-Type Drills

Used with:
- 2S-2600, 2S-2600HD, 2600-2S
- 3S-3000, 3S-3000HD, 3000-3S
- 3S-4000, 3S-4000HD

When you see this symbol, the subsequent instruction. and warnings are serious - follow without exception. Your life and the lives of others depend on it!

General Information

These instructions explain how to install:

- a dual-gauge-wheel upgrade on a single-gauge-wheel drill, or
- a spindle update on an existing dual-wheel drill that has a pinned lower drive sprocket.

These instructions apply to an installation of:

Kit	Kit Description
195-060A	3000 DUAL GW SKID STEER FIELD
195-079A	MIN-TILL DRV SPINDLE FIELD KIT
195-122A	DUAL GW FIELD UPDATE 2600,3000

One kit updates one drill (both wings). Dual-wheel drills manufactured in March 2009 or later require no kits.

Drill Model	Kit Compatibility
2600-2S	All
2S-2600	Serial number DD1414 or lower
2S-2600HD	Serial number DD1414 or lower
3000-3S	Serial number S1182 through S2189
3S-3000	Serial number S1182 through S2189
3S-3000HD	Serial number S2189 or lower
3S-4000	Serial number YY1933 or lower
3S-4000HD	Serial number YY1933 or lower

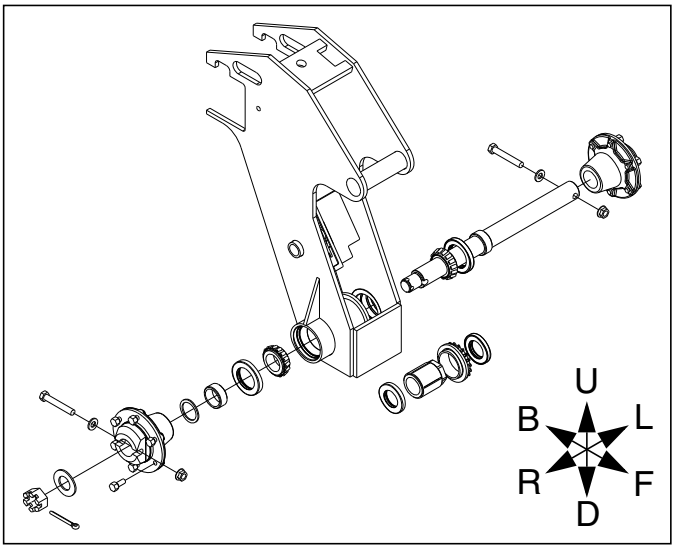

Figure 1 29442
Dual Gauge Wheel Assembly

Related Documents

Have the Operator Manual at hand for drill movements.

195-200M Operator, 2600-2S
195-200M-A Operator, 2S-2600
195-069M Operator, 2S-2600HD
195-110M Operator, 3000-3S
195-110M-A Operator, 3S-3000
195-068M Operator, 3S-3000HD
195-242M Operator, 3S-4000
195-067M Operator, 3S-4000HD

Have the current Parts Manual at hand for parts ID.

195-200P Parts, 2600-2S and 2S-2600
195-069P Parts, 2S-2600HD
195-110P Parts, 3000-3S and 3S-3000
195-068P Parts, 3S-3000HD
195-242P Parts, 3S-4000
195-067P Parts, 3S-4000HD

Notations and Conventions

"Left" and "Right" are facing in the direction of machine travel. An orientation rose in the line art illustrations shows the directions of Left, Right, Front, Back, Up, Down.

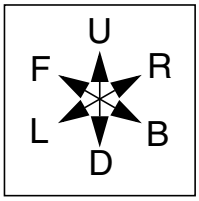

Call-Outs

① to ⑨ Single-digit callouts identify components in the currently referenced Figure or Figures. These numbers may be reused for different items from page to page.

⑪ to ㊴ Two-digit callouts in the range 11 to 39 reference new parts from the new parts lists beginning on page 20.

㊶ to ㊿ Two-digit callouts in the range 51 to 70 reference affected existing parts from the table on page 22. The descriptions match those in your Parts Manual. The narrative and table indicate any re-use of the parts.

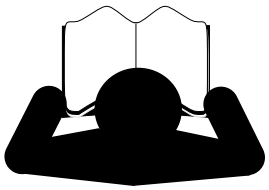

Before You Start

Compatibility

Refer to Figure 2

1. Make sure that the drill is a compatible model. Check the serial number plate against the table on page 1. Verify from the serial number that the drill is compatible with this kit.

   Early model 3000-3S and 3S-3000 drills have an incompatible hub size.

Inventory

2. Make sure all parts are present.

Comprehension

3. Review these instructions. Make sure the installers understand where each part or assembly is installed, and what tools are required for the task.

Note: Illustrations in this manual, based on the parts manuals for this family of drills, may show exploded views that are fully disassembled. Rely on the instructions for required disassembly and reassembly steps.

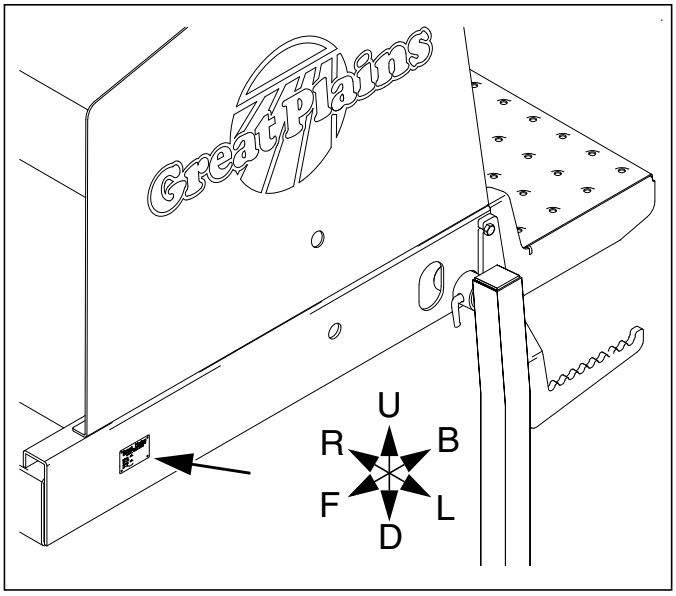

Figure 2 15614
Serial Number Plate

Pre-Assembly Preparation

Tools Required

- updated drill Parts Manual (see page 1)
- suitable tractor for positioning, unfolding and lowering drill
- blocks for securing transport tires if drill will be unhitched for the work
- a jack or stand for elevating one gauge wheel weldment at a time
- bearing seal removal and seating tools; if specialized tools are not available, substitute two lengths of thick (e.g. Schedule 40) plastic pipe with outside diameters:

  A. inside seal: 3 to $3\frac{3}{8}$in (7.62 to 8.57cm), and

  B. outside seal: $3\frac{1}{2}$ to $3\frac{7}{8}$in (8.89 to 9.84cm)

  C. bearing cup: $3\frac{1}{2}$ to $3\frac{3}{4}$in (8.89 to 9.52cm)

  A length of about 1ft (30cm) suffices. A cap on one end would provide a tapping surface for a mallet.

  For seating the shallow inside seal, use a flat metal plate, about $\frac{3}{4}$in x 4in and 12in long (2x5x30cm).
- a length of steel or iron pipe, $1\frac{3}{8}$in (3.5cm) I.D. or larger, and a length of 3 to 5 feet (just over a meter)
- de-greasing fluids,
  anti-seize compound, and
  bearing grease
- basic hand tools, including:
  $2\frac{1}{4}$in (5.8cm) hex socket
  $\frac{5}{16}$in (7.5 to 7.9mm) punch

Prepare Drill

Work Location

4. Move the drill to a location with:
   - room to unfold it, as well as move it forward and back several feet (a few meters),
   - access to tractor or hydraulic power,
   - adequate illumination, and;
   - clear surface beneath for recovery of any falling or dropped parts - if the surface is not clear, have a tarp or drop cloth available.

Remove Ground Drive Chains

5. Fully unfold drill. Raise drill.

Refer to Figure 3

6. Pull drill forward until, at the left gauge wheel, the clip ① joining the chain ends is accessible.
7. Loosen the nut and bolt securing the slotted idler ②. Relax the idler in the slot.
8. Remove and save the chain ③.
9. Repeat step 6 through step 8 for the right wing.

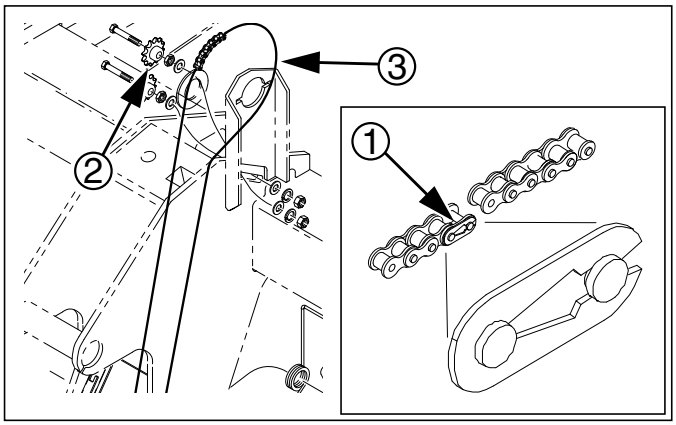

Figure 3
Dismount Chain

29445
26482

Prepare Drill for Installation

10. Position the drill at the installation site.
11. Install parking stands if drill is so equipped.
12. Lower the drill. Lower the openers.

⚠WARNING

Negative tongue weight hazard:
Do not unhitch until fully lowered. Some of these drills can have significant negative tongue weight when fully unfolded and raised. The tongue can fly up during transport or opener lift, if using stationary hydraulic power to operate drill.

13. Put the lift circuits in Float.
14. Shut off tractor or hydraulic source. Put tractor in Park.

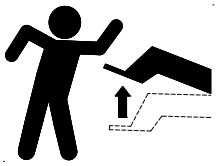

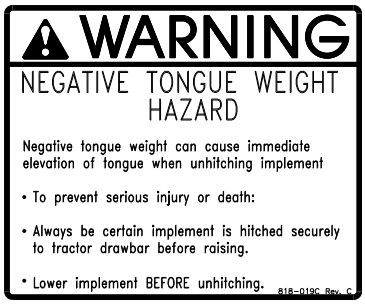

Remove Existing Spindle

Step 16 through step 91 are for one wing. Start with the left wing.

Release Spindle Nut and Wheel Bolts

Existing spindle nuts may be difficult to remove due to exposure to the elements. Loosen them before dismounting wheels.

Refer to Figure 4

15. Identify the spindle nut style used on your drill.
    For ring-style bearing nuts [58], go to step 16.
    For castellated (slotted) nuts [59], skip to step 19.
16. At the ground drive, remove the outer:
    [58] 803-208C NUT BRG LOCK, TN-10
    and
    [62] 804-098C WASHER BRG LOCK, TW110
    These parts are not re-used.
17. Loosen, but do not remove the inner:
    [58] 803-208C NUT BRG LOCK, TN-10
    and all:
    [56] 802-104C BOLT WHEEL 1/2-20X1 90-DEG
18. If step 16 and step 17 were done, skip to step 21.
19. At the ground drive, remove one:
    [65] 805-148C PIN COTTER 3/8 X 3 PLT
    The cotter pin is not re-used.
20. Loosen, but do not remove:
    [59] 803-239C NUT HEX SLOTTED 1 1/2-12 PLT
    and all:
    [56] 802-104C BOLT WHEEL 1/2-20X1 90-DEG

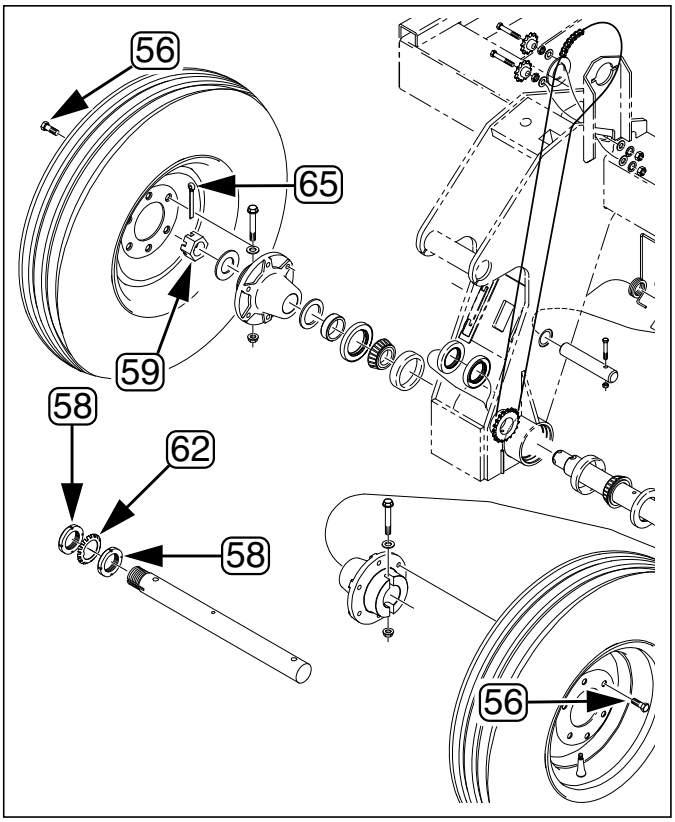

Figure 4 29445
Release Existing Spindle Nuts

Release Existing Sprocket

Refer to Figure 5

21. Jack up the wing ground drive weldment. Locate the inner sprocket [66] inside the lower weldment.
22. Rotate spindle [54] until roll pin [64] is accessible.
23. Drive out roll pin:
    [64] 805-030C PIN ROLL 5/16 X 3 PLT
    This pin is not re-used.

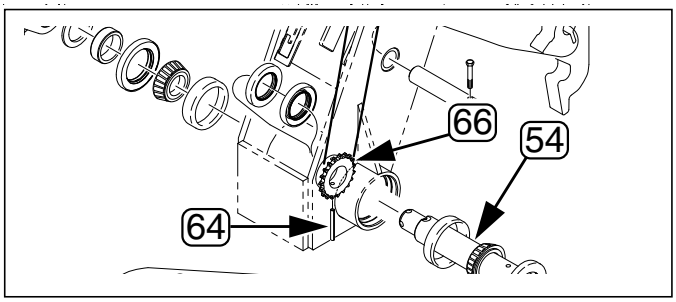

Figure 5 29445
Release Existing Sprocket

Dismount Wheel(s) and Hub(s)

Refer to Figure 6

24. Remove and save six (6) or twelve (12) existing:
    56 802-104C BOLT WHEEL 1/2-20X1 90-DEG
    Dismount and save the wheels:
    53 161-046K 6 BOLT WHL&TIRE 8 PLY TUBELESS
25. Remove the spindle nut loosened at step 17 or step 20.

    58 803-208C NUT BRG LOCK, TN-10
    No save. This style nut is not re-used.

    59 803-239C NUT HEX SLOTTED 1 1/2-12 PLT
    Save. This nut is re-used.
26. Remove and save any washer:
    63 804-182C WASHER HARD 1 1/2 MILCARB GR8
27. Remove and save one or two sets:
    60 803-263C NUT HEX FLANGE LOCK 5/8-11 PLT
    61 804-095C WASHER FLAT 5/8 HARD ASTMF436
    57 802-687C HHCS 5/8-11X4 SPTHD GR8
28. Remove and save one or two:
    52 152-390D 6-BOLT HEAVY DRIVE HUB 2 BORE

    Save the hub(s) if your kit is 195-079A spindle update only. The other kits include new hubs.

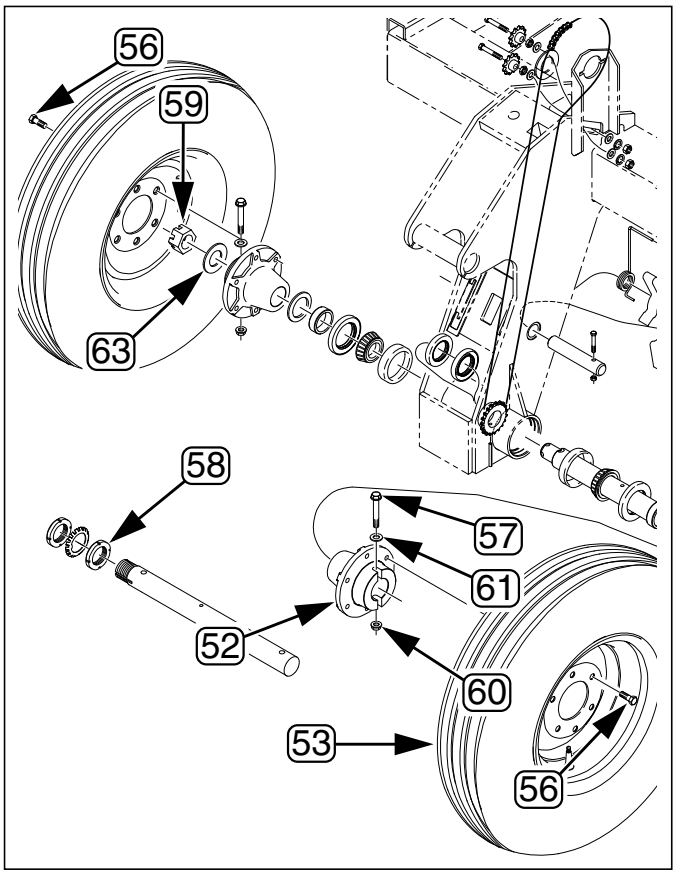

Figure 6 29445
Dismount Wheel(s) and Hub(s)

Remove Old Spindle

Refer to Figure 7

29. Remove and save one:
    63 804-182C WASHER HARD 1 1/2 MILCARB GR8
30. Remove and save two:
    51 120-198D AXLE SPACER TUBE
31. Remove one each:
    54 195-229D SPNDLE 2"W/5/8 CROSS HOLE DUAL
    66 808-287C SPKT 50B19C2B W/5/16 HOLE
    These parts are not re-used.

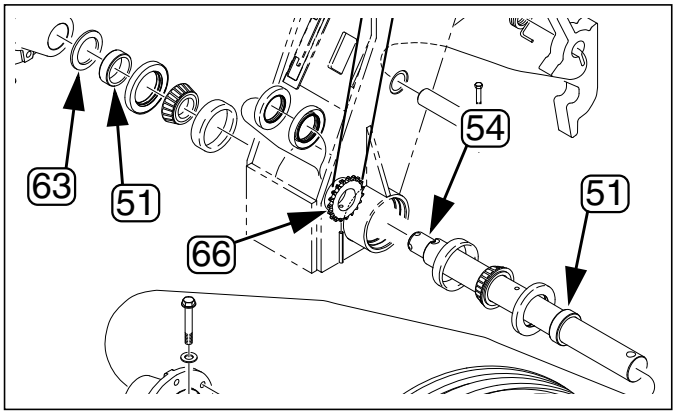

Figure 7 29445
Remove Spindle

Remove Seals and Bearings

Because the new spindle and sprocket hub must be clean and dry when assembled, the existing bearings must be at least partially disassembled.

Refer to Figure 8

32. Use a bearing seal puller, or right-angle pry tools, to remove two:
    (68) 816-138C SEAL DBL LIP 2.5 ID X 3.881 OD

Note: Removing seals is likely to result in seal damage, rendering them unsuitable for re-use. The bearing cone and cup, however, are re-used. Exercise care to prevent damage to the bearings.

33. Remove and save two:
    (69) 822-117C BRG CONE 2.00ID TIM33889
    These cones are re-used, unless being independently replaced due to wear or damage.

34. Use a bearing seal puller, or right-angle pry tools, to remove two:
    (67) 816-012C SEAL 3.375 X 2.0 X.438 CR20125
    These seals are not re-used.

35. Clean, de-grease and dry bearing cones (69) and weldment through-holes (which still have the bearing cups (70) and inner bearing seals (67) present).

36. Inspect the bearing cones (69) and cups (70) for signs of wear and damage. The kits do not include new bearings, but they should be replaced if not in serviceable condition.

37. If bearings must be replaced, remove two:
    (70) 822-118C BRG CUP 3.75OD TIM33821
    The bearing cups are re-used, unless being independently replaced due to wear or damage.

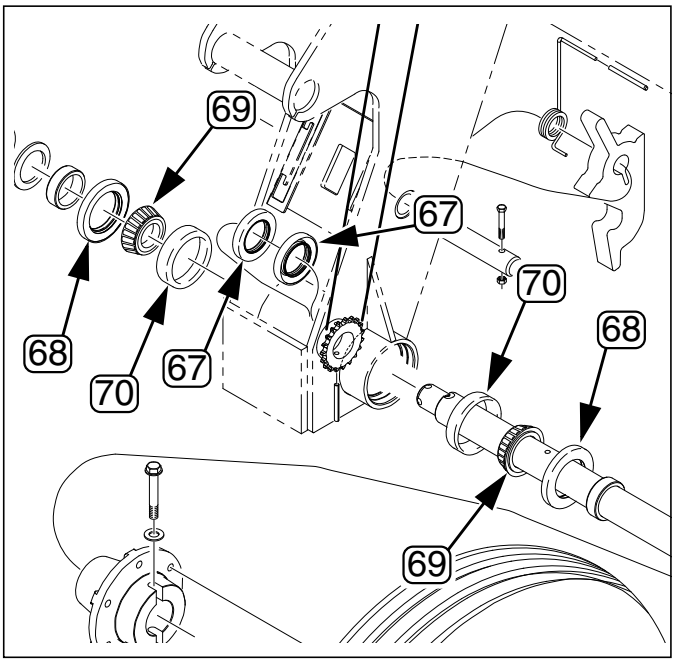

Figure 8 29445
Remove Seals and Bearings

Install New Spindle

About Bearing Seals

Refer to Figure 9 and Figure 10

The new bearing seals are supplied in two sizes:
㉖ 816-012C SEAL 3.375 X 2.0 X.438 CR20125
㉗ 816-138C SEAL DBL LIP 2.5 ID X 3.881 OD

The smaller diameter (inside) seals are installed into the axle-cup weldments from the inside of the gauge wheel weldment. The larger diameter (outside) seals are installed from the outside.

Note that there are two different axle-cup weldments on each gauge wheel:
① a long hub, where the seal seats deeply, and
② a short (shallow) hub.
These are reversed left-to-right on each side.

Bearing seals have distinct faces:
③ inner - toward sealed area ⑤ (bearing)
④ outer - away from sealed area ⑤ (bearing), and
The inner face ③ has the seams ⑥ of the shells. The outer face ④ has any printing on the housing. If the seal has a visible taper at the outside diameter, the smaller diameter side is the inside.

The seals and keyless hub must be installed in a specific order, depending on the tools available. Using the suggested tools, the order used in these instructions is:

a. bearing cups (if not left in place)

b. inside seal ㉖ in deep hub ①.

c. keyless hub (not shown on this page)

d. inside seal ㉖ in shallow hub ②

e. bearing cones (not shown on this page)

f. outside seals ㉗.

If using different tools, rehearse the sequence before starting work.

IMPORTANT !

Seals are hollow metal structures and are somewhat fragile. The are not intended to be in contact with the bearings. When installing them, carefully align them so they are concentric with the shaft hole. Apply insertion force across the entire face, or at least equally along the entire outside diameter (as close to the shaft diameter as possible). See page 3 for tool suggestions.

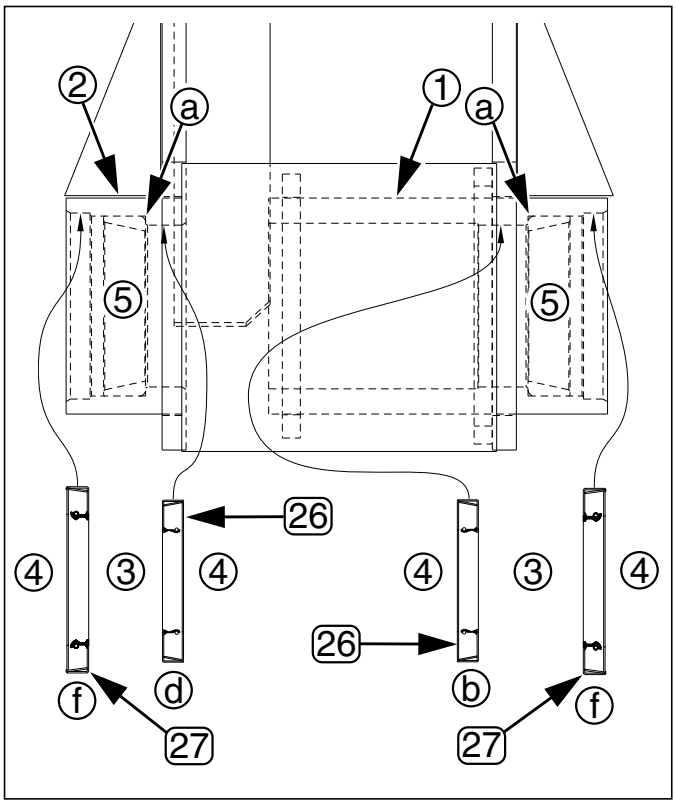

Figure 9
Seal Locations
29448

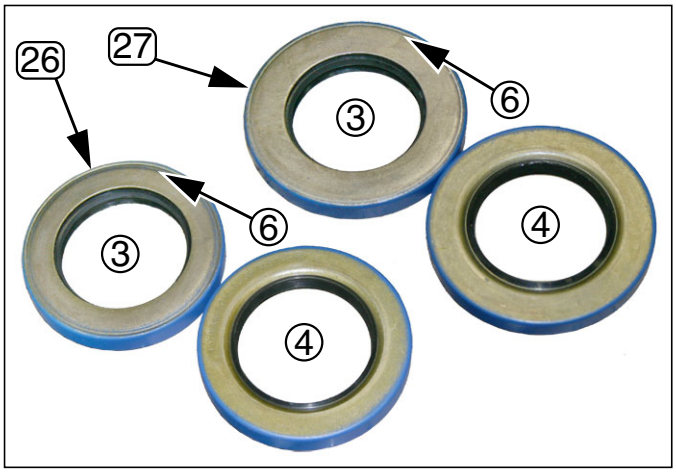

Figure 10
Bearing Seals
29447

Install Inner Bearing Cups

If existing bearing cups are still installed (were not removed at step 37), skip to step 39.

Refer to Figure 11 and Figure 9 on page 8

38. Select two separately purchased:
    ⑦⓪ 822-118C BRG CUP 3.75OD TIM33821

    With the thin lip of the cones facing out, seat the cones in the axle-cup weldments from the outside, location ⓐ in ***Figure 9***.

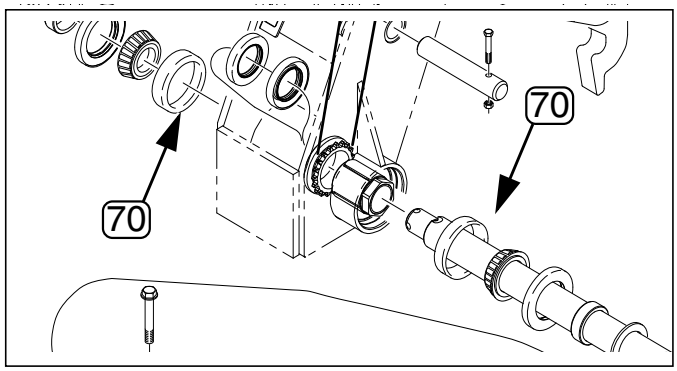

Figure 11 29446
Seat Bearing Cups

Install Deep Inner Bearing Seal

Review Figure 9 and Figure 10 on page 8, and Refer to Figure 12

39. Select one:
    ②⑥ 816-012C SEAL 3.375 X 2.0 X.438 CR20125

    From the inside of the gauge wheel weldment, seat the seal in the deeper axle-cup weldment ①, with the seal face oriented as shown in ***Figure 9*** location ⓑ.

    Seat the seal so that it is completely inside the narrow diameter of the weldment, and close to, but not touching the bearing cup (⑤-right in ***Figure 9)***.

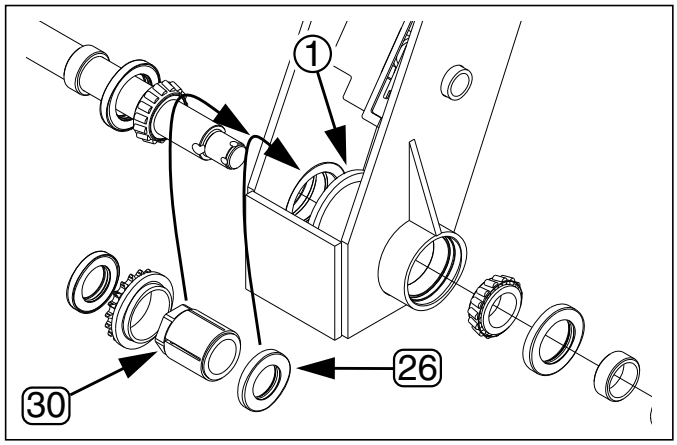

Figure 12 29442
Deep Seal and Keyless Hub

Install Keyless Hub

Prepare Keyless Hub

40. Select one each new:
    ①④ 195-351D SPNDL 2 X 24.7 1.5-12THD NOHLE
    ②⑤ 808-413C SPKT 50B19 2.88 KEYLESS BORE
    Clean, de-grease and dry these parts.

Refer to Figure 13

41. Select one each new:
    ③⓪ 891-137C HUB KEYLESS 2.0 BORE X 2.88 OD

    Study how this device works until you are familiar with it, as some later instructions for tightening can otherwise seem counter-intuitive.

42. On a work bench, slide the keyless hub ③⓪ onto the spindle ①④ and add the sprocket ②⑤. Rotate the nut ⑦ as needed until the inner collet ⑧ just begins to rub the spindle and the outer collet ⑨ begins to rub the sprocket ②⑤. Back the nut off $\frac{1}{4}$ turn.

    Remove the keyless hub from the spindle. Remove the sprocket from the keyless hub.

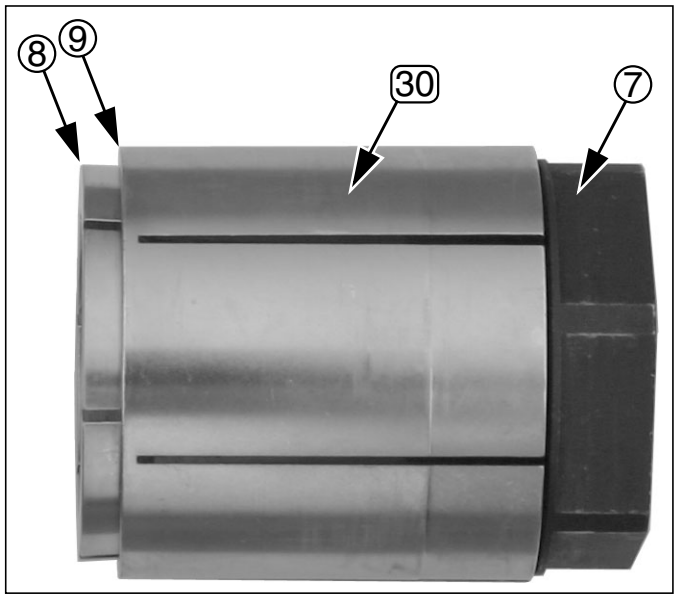

Figure 13 29449
Keyless Hub (③⓪)

Position Keyless Hub

Refer to Figure 12

43. With the nut ⑦ end of the keyless hub [30] oriented away from the weldments, insert the hub through the shallow axle-cup weldment and into the deep axle-cup weldment ①.

Note: The nut ⑦ must be visible in the gap between the shallow and deep axle-cup weldments.

Install Shallow Seal

Review Figure 9 and Figure 10 on page 8, and Refer to Figure 14

44. Select one new:
    [26] 816-012C SEAL 3.375 X 2.0 X.438 CR20125

    From the inside of the gauge wheel weldment, use the flat plate to seat the seal about $^1/_4$in (6mm) below flush in the shallow axle-cup weldment ②, with the seal face oriented as shown at ② in ***Figure 9*** location ⓓ.

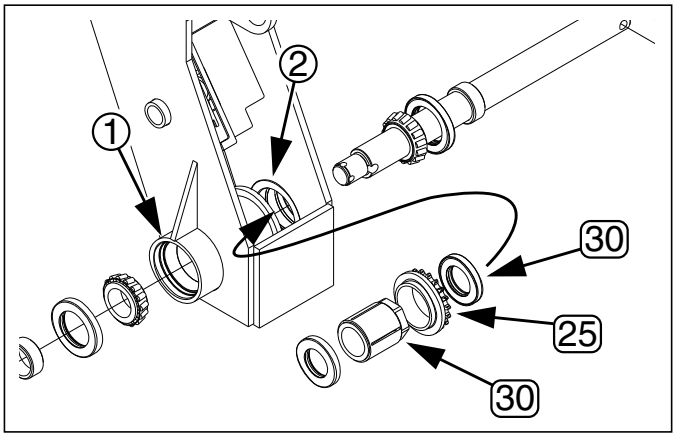

Figure 14 29442
Shallow Seal, Sprocket & Spindle

Insert Sprocket

Refer to Figure 15

45. Slide the keyless hub [30] (not visible in ***Figure 15***) out of the gap and into the deep axle-cup weldment ①.

46. Position the sprocket [25] in the gap. Orient the flanged side of the sprocket toward the deep axle-cup weldment ①, and the toothed side toward the shallow axle-cup weldment ②.

47. Slide the keyless hub [30] into the sprocket [25].

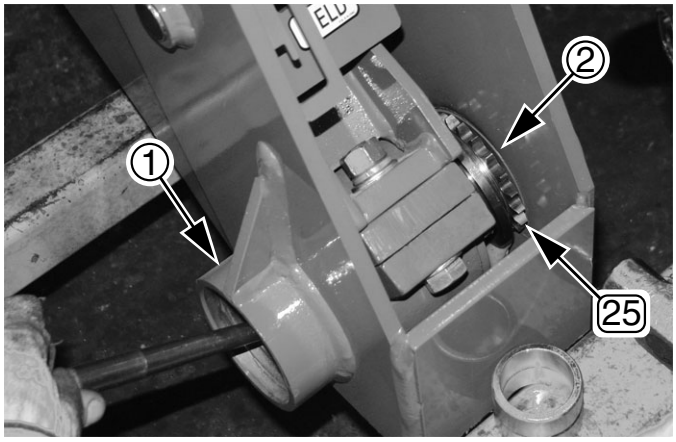

Figure 15 29467
Insert Sprocket

Insert New Spindle

Refer to Figure 14 and Figure 16

48. From drill left on the left wing (drill right on the right wing), insert the blunt (non-threaded end) of the spindle (14) into the gauge wheel weldment, through the bearing seal. (This places the spindle nut to the outside for easier cotter pin inspection and maintenance.)
49. Pass the spindle (14) through the keyless hub and sprocket (25), and out the other side of the gauge wheel weldment.
50. Adjust the spindle position until the distance, from the outside edges ③ of the axle-cup weldments, to the bolt holes ④ in the spindle, is roughly equal on each side.

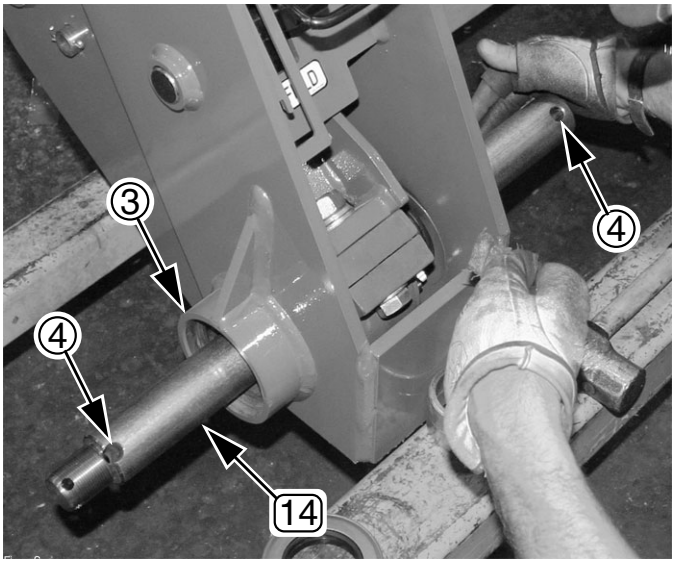

Figure 16 29450
Insert and Center Spindle

Install Bearing Cones

Refer to Figure 17

51. Select two saved or separately purchased:
    (69) 822-117C BRG CONE 2.00ID TIM33889

    Pack the bearings (69) with bearing grease. Taking care to not move the spindle, insert the cones, small end first, into the bearing cups.

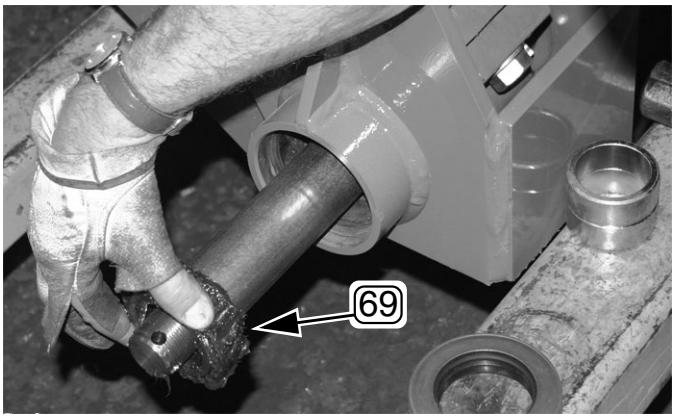

Figure 17 29451
Pack and Insert Bearing Cones

Install Outside Seals

Review Figure 9 and Figure 10 on page 8, and Refer to Figure 18

52. Select two new:
    (27) 816-138C SEAL DBL LIP 2.5 ID X 3.881 OD

    Fully seat the seals in the outside of both axle-cup weldments, with the seal face oriented as shown in ***Figure 9*** location ⓕ.

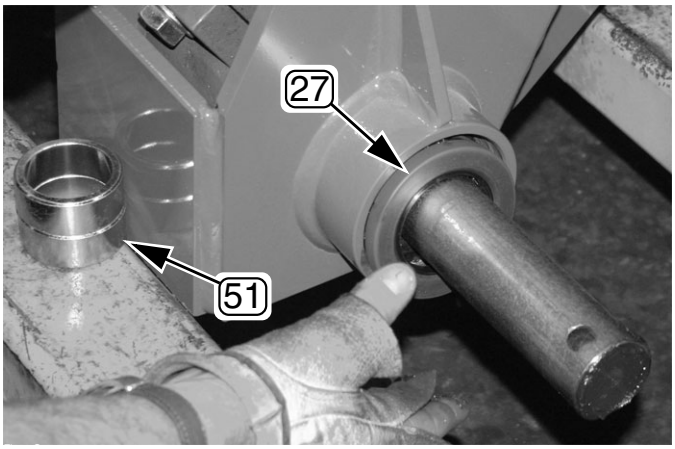

Figure 18 29453
Install Outside Bearing Seal

Install Spacer Tubes

Refer to Figure 19

53. Apply anti-seize compound to the exposed, non-threaded portions of the spindle outside the weldment.
54. Select two saved:
    51 120-198D AXLE SPACER TUBE

    Place the spacers over the spindle shaft and inside the bearing seals.

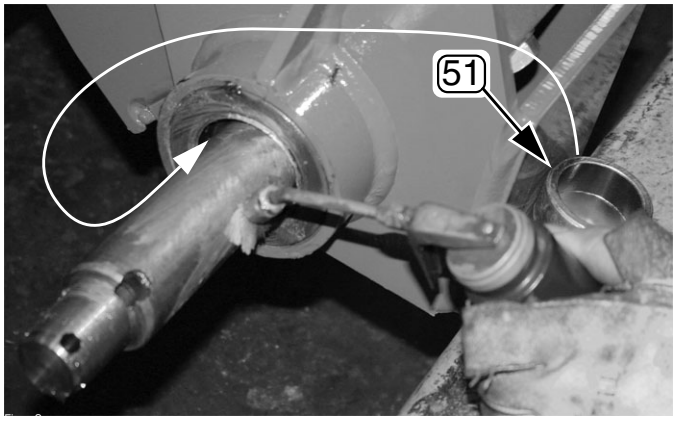

Figure 19 29454
Install Spacer Tube

Align and Secure Keyless Hub

Temporarily Install a Wheel Hub

Refer to Figure 20 and Figure 28 on page 17

55. Select one new or saved wheel hub:
    12 52 152-390D 6-BOLT HEAVY DRIVE HUB 2 BORE
    and one set new or saved:
    19 57 802-687C HHCS 5/8-11X4 SPTHD GR8
    22 61 804-095C WASHER FLAT 5/8 HARD ASTMF436
    21 60 803-263C NUT HEX FLANGE LOCK 5/8-11 PLT

    Mount the hub 12 52 on the blunt (non-threaded) end of the spindle 14. Take care to avoid moving the spindle so much that it contaminates the keyless hub with bearing grease or anti-seize compound.
56. Loosely secure the hub with bolt 19 57, washer 22 61 and flanged lock nut 21 60.

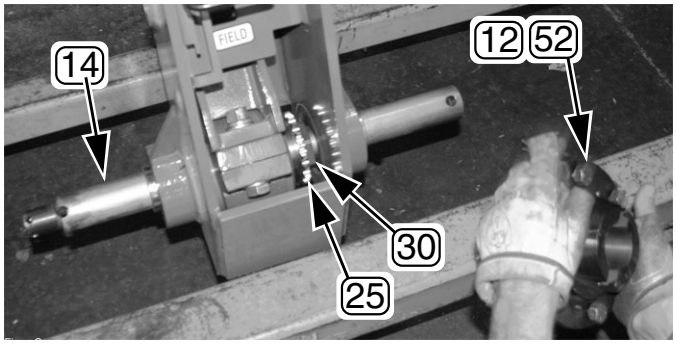

Figure 20 29455
Temporarily Mount Wheel Hubs

Refer to Figure 21

57. Select one of each new:
    (13) 195-234D WASHER FLAT 2 ID X 2 5/8 X 10G
    (16) 195-354D WASHER FLAT 2 ID X 2 5/8 X 16G

    Place these washers (13) and (16) on the threaded end of the spindle. These are to ensure that the hub on the other end of the spindle fully seats.

58. Select one new or saved wheel hub:
    (12)(52) 152-390D 6-BOLT HEAVY DRIVE HUB 2 BORE
    and one set new or saved:
    (19)(57) 802-687C HHCS 5/8-11X4 SPTHD GR8
    (22)(61) 804-095C WASHER FLAT 5/8 HARD ASTMF436
    (21)(60) 803-263C NUT HEX FLANGE LOCK 5/8-11 PLT

    Mount the hub (12)(52) on the threaded end of the spindle (14).

59. Select one each new or saved:
    (23)(63) 804-182C WASHER HARD 1 1/2 MILCARB GR8
    (20)(59) 803-239C NUT HEX SLOTTED 1 1/2-12 PLT

    Place the washer on the threaded end of the spindle, and add the nut (20) or (59). Slowly tighten the nut just until there is no side-to-side play in the spindle. Rotate spindle to ensure bearings seat.

60. Select one set new or saved:
    (19)(57) 802-687C HHCS 5/8-11X4 SPTHD GR8
    (22)(61) 804-095C WASHER FLAT 5/8 HARD ASTMF436
    (21)(60) 803-263C NUT HEX FLANGE LOCK 5/8-11 PLT

    Loosely secure the hub with bolt (19)(57), washer (22)(61) and flanged lock nut (21)(60). If the cross bolt cannot be passed through the hub, it may be necessary to remove one of the washers installed at step 57.

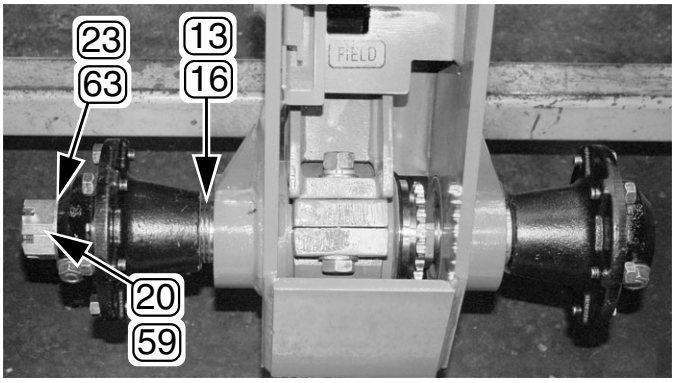

Figure 21 29470
Remove Play and Seat Bearings

IMPORTANT !

To protect the seals during keyless hub tightening, and sure proper spacing for keyless hub alignment, the spindle must be fully seated in the bearings. Do not over-tighten.

Align Sprocket and Keyless Hub

About Final Sprocket Position

Refer to Figure 22

The keyless hub assembly moves as it is tightened. before beginning to tighten, identify which style of weldment is present on your drill, and review the final target clearances.

There are two major weldment variants present on drills which are candidates for this update:

- Shallow Hub with Raised Inside End
  Drills built before March 2009 are likely to have a $^{1}/_{4}$in (6mm) raised edge (shown as dotted line ⓡ in the figure). The open end wrench [15] supplied with the kit may be used as a spacing gauge on this type drill.
- Shallow Hub with Flush Inside End
  Drills built during and after March 2009 are likely to have shallow weldment with an inside face that is nearly flush with the gauge wheel assembly side plates. An additional $^{3}/_{16}$in (5mm) spacing gauge (not included) is needed in this case. The majority of such drills will already have keyless hubs, but these instructions still apply for a single- to dual-wheel upgrade.

The desired final clearance dimensions are shown in the table at right.

After the keyless hub is tightened, there is provision for adjusting the spindle position with the 2in washers in the kit (plus any washers removed from the drill).

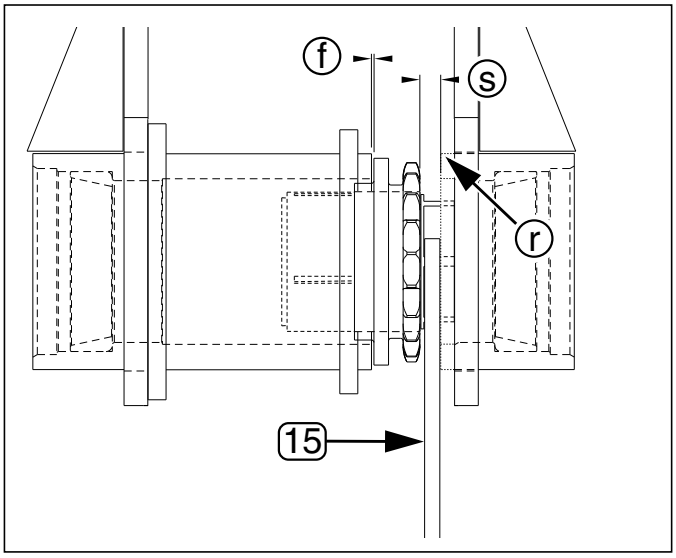

Figure 22 29471
Final Sprocket Alignment

ⓕ	flanged side	1/32in (0.8mm) to 1/8in (3.2mm) This gap keeps the sprocket from striking the deep weldment during use.
ⓢ	sprocket side	1/4in (6mm) minimum This gap keeps the chain from striking the shallow weldment or side plate during use.

About Final Sprocket-to-Hub Position

Refer to Figure 23

The sprocket must be fully on the outside split cylinder of the keyless hub. These instructions recommend that the toothed face of the sprocket be aligned with the edge of the hub cylinder at the nut end.

A small amount of hub cylinder may be exposed, but revealing too much may allow the nut or inside collet to strike a bearing seal.

61. Adjust position of sprocket [25] on hub [30] until sprocket face aligns with edge of outer collet ①.

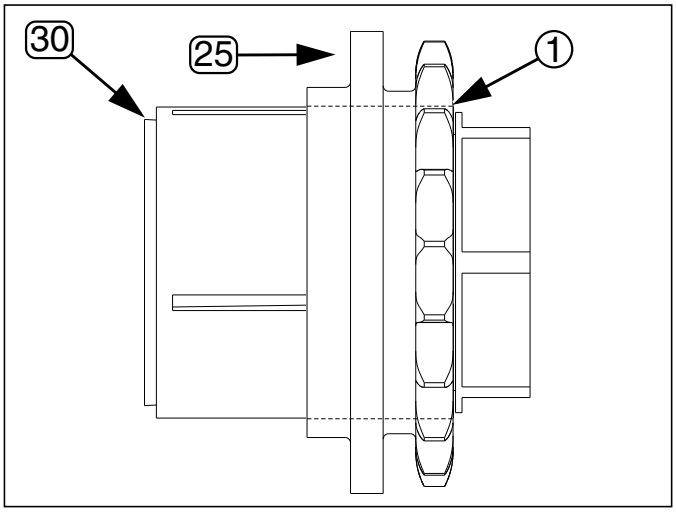

Figure 23 29456
Sprocket - Keyless Hub Alignment

Secure Keyless Hub

Refer to Figure 24 and Figure 23 on page 14

62. Select one new:
    (15) 195-352D WRENCH OPEN END 2 1/2

    Place the open end of the wrench over the nut of the keyless hub (30) (not visible in figure).

63. Slide entire keyless hub assembly (25) toward shallow axle weldment, until assembly contacts wrench (and $^{3}/_{16}$in or 5mm spacing gauge on newer drills).

64. Use a dowel to drive the sprocket teeth, tightening the nut so that the outer collet expands and captures the sprocket (25). Check sprocket-hub alignment, and seating of wheel hub, during this process. Secure until gentle taps no longer tighten.

65. Rotate either wheel hub to further tighten keyless hub on spindle. Secure to hand-tight. Leave wrench (15) on hub nut.

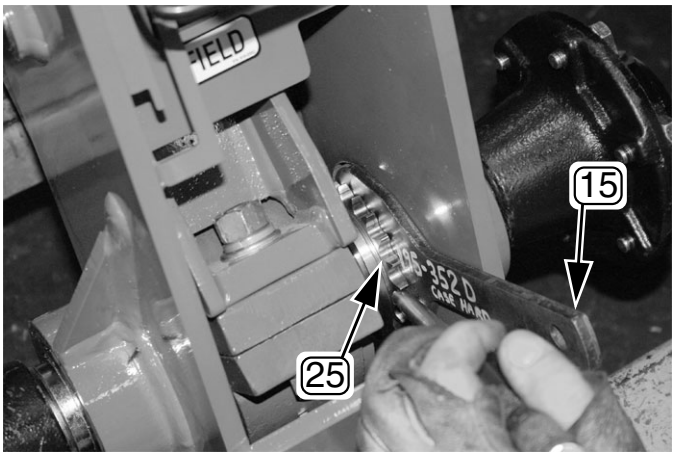

Figure 24 29457
Tighten Sprocket to Hub

Fully Tighten Keyless Hub

Refer to Figure 25

66. Select one new:
    (17) 195-355D WRENCH SPANNER 6 BOLT HUB
    and six new or saved:
    (18)(56) 802-104C BOLT WHEEL 1/2-20X1 90-DEG

    Loosely insert the bolts (18)(56) in the temporary hub (12)(52), leaving enough space for the spanner (17) to fit under the bolt heads.

67. Carefully check that spindle will be turning in the correct direction to tighten inside collet to hub nut.

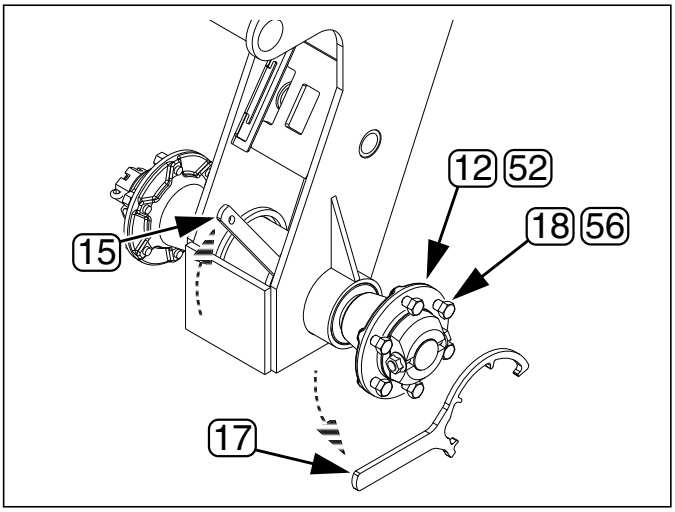

Figure 25 29458
Torque Keyless Hub

68. Place a length of $1^{3}/_{8}$ I.D. pipe over the spanner (17) and tighten the spindle-hub assembly to at least:
    300 ft-lbs (407 N-m).
    Do not exceed:
    409 ft-lbs (555 N-m).

    The suggested 300ft-lb/407N-m can be achieved by applying a known force at a specific distance from the spindle center. If applying dead weight, the pipe must be at horizontal.

Horizontal Lever Arm Weight for 409-300 ft-lb (555-1334 N-m)

U.S. Customary Units		Metric Units	
Distance	Weight	Distance	Weight
1 foot	300 - 409 lb	30 cm	138 - 188 kg
2 feet	150 - 205 lb	50 cm	83 - 113 kg
3 feet	100 - 136 lb	1 m	41 - 57 kg
4 feet	75 - 102 lb	1.5 m	28 - 38 kg
5 feet	60 - 82 lb	2 m	21 - 28 kg

Install Wheels

Check Sprocket Alignment

69. Remove tools (15) and (17).

Refer to Figure 26 and Figure 22 on page 14

70. Observe the position of the new sprocket in the weldment. Compare the clearances to the target values in ***Figure 22***.
71. Typically, the sprocket will be too close to the deeper axle weldment. Estimate how many 2in washers would be needed to shift the sprocket toward the shallow weldment.

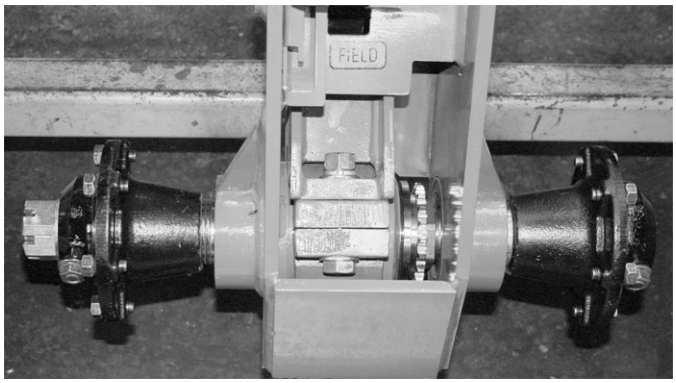

Figure 26 29470
Check Sprocket Clearances

Dismount Temporary Hubs

Refer to Figure 27 and Figure 28

72. Remove and save wheel bolts (18)(56).
73. Remove and save bolts (19)(57), washers (22)(61) (not shown) and flanged lock nuts (21)(60).
74. Remove and save hubs (12)(52).
75. Remove all washers (not visible in figure):
    (13)(55) 195-234D WASHER FLAT 2 ID X 2 5/8 X 10G
    (16) 195-354D WASHER FLAT 2 ID X 2 5/8 X 16G

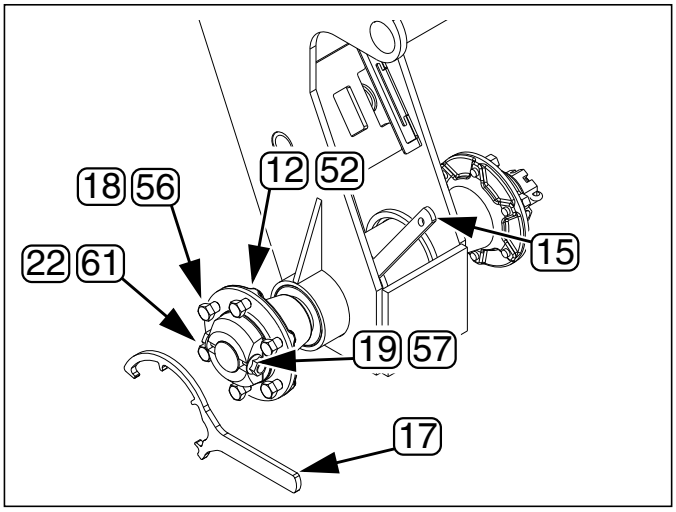

Figure 27 29458
Dismount Temporary Hub

Adjust Sprocket Clearance

76. On the blunt (non-threaded) end of the spindle, add the estimated set of 2in washers needed to shift the sprocket into clearance range.
77. Add a hub (12)(52) to the blunt end of the spindle, and temporarily secure with a cross-bolt (19)(57). A nut and washer are not needed for this step.
78. Push against the blunt (non-threaded) end of the spindle to fully seat the hub, washers, spacer and bearing. Check the sprocket clearances. Adjust washer mix as needed to achieve spacing.

Note: There are two gauge wheel weldments. Don't use more than half of the 2in washer adjusting the first weldment. If more than half of the washers are needed, remove all washer, loosen the keyless hub and re-position it starting at step 61.

Final Wheel Hub Install

Refer to Figure 28

79. With correct sprocket clearances achieved, place a hub [12][52] on the threaded end of the spindle.

80. Select one new or saved washer and nut:
[23][63] 804-182C WASHER HARD 1 1/2 MILCARB GR8
[20][59] 803-239C NUT HEX SLOTTED 1 1/2-12 PLT

    Place the washer [23][63] on the threaded end of the spindle, and add nut [20][59]. Tighten nut until hub [12][52] is seated far enough to allow insertion of hub cross-bolt.

81. Secure hub cross-bolts with washers [22][61] and flanged lock nuts [21][60]. Tighten lock nuts until a gap of $^{1}/_{32}$in (0.8mm) remains between nut [21][60] or washer [22][61] and hub casting.

82. Continue tightening castellated nut [20][59] until there is no side-to-side play in the spindle assembly. If there is still play with the nut fully seated, remove the hub and add a 2in washer [13][16][55] to the threaded end of the spindle.

IMPORTANT !

Do not overtighten castellated nut, or bearings will be damaged.

83. Rotate the spindle and check for sprocket and hub clearance inside the gauge wheel weldment.

84. Select one new:
[24] 805-148C PIN COTTER 3/8 X 3 PLT

    Secure castellated nut [20][59] with cotter pin.

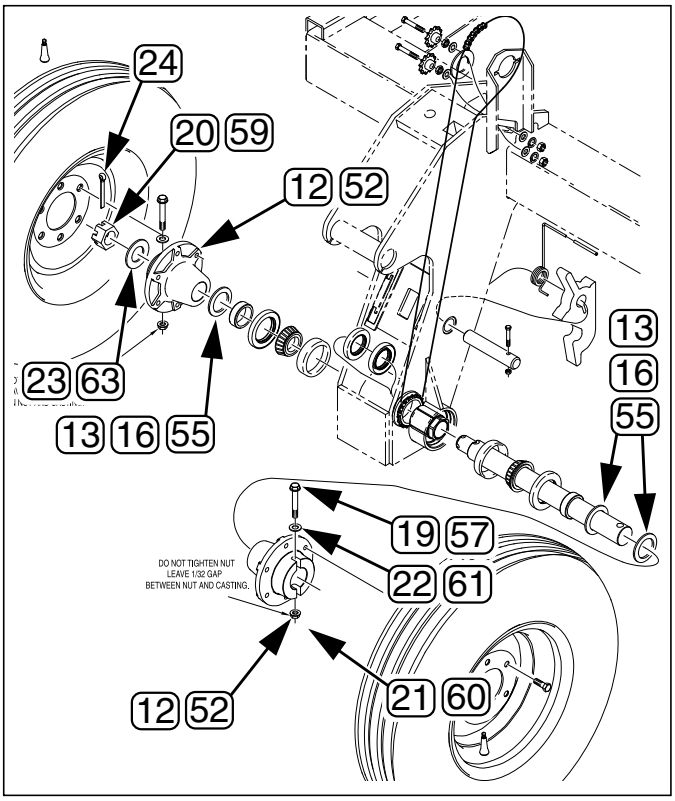

Figure 28 29446
Final Wheel Hub Install

Mount Wheels

Refer to Figure 29

85. Select two new or saved wheel sets:
[31], [32], [33] or [53]
and if new wheels, two new decals:
[28] 818-751C DECAL CAUTION TIRE 32 PSI
or
[29] 838-092C DECAL CAUTION TIRE 60PSI/85FT

    Clean and dry the wheel rim near the valve stem. Apply the decals. Smooth out any air bubbles.

86. Select twelve (12) new or saved wheel bolts:
[18][56] 802-104C BOLT WHEEL 1/2-20X1 90-DEG

    Mount the wheels with the valve stem side facing away from the ground drive weldment. Torque to specified value on decal. See torque chart on page 19 for metric values.

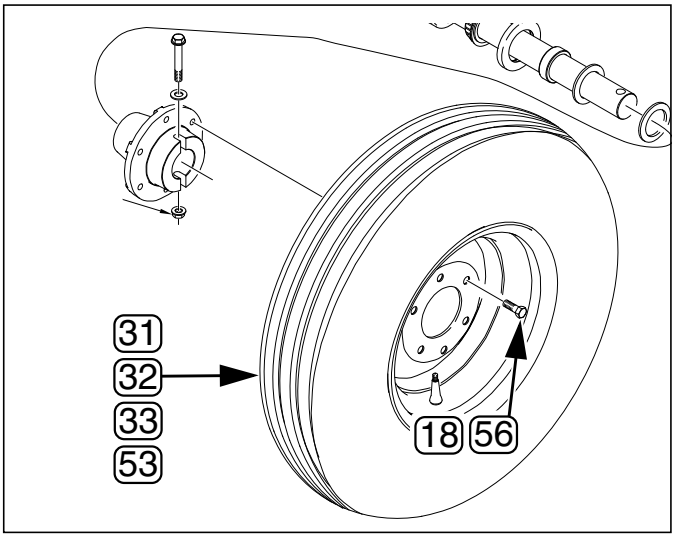

Figure 29 29446
Wheel Mounting

Wing Close-Out

Re-Install Chain

Refer to Figure 30

87. Select the saved ground drive chain ③.

    Route it under and behind the new lower driving sprocket (㉕, not shown), then behind the lower idler ④, above the upper idler ②, over (from behind) at the upper driven sprocket (not shown), and down to the front of the new driving sprocket.

88. Assemble chain ends with removable link ①. Make sure open end of clip faces away from direction of chain travel (striped arrows).

89. Engage slotted idler until front length of chain has $^{5}/_{8}$in (16mm) slack.

90. Lubricate chain.

91. Lower jack.

92. Perform step 21 through step 91 for the right wing.

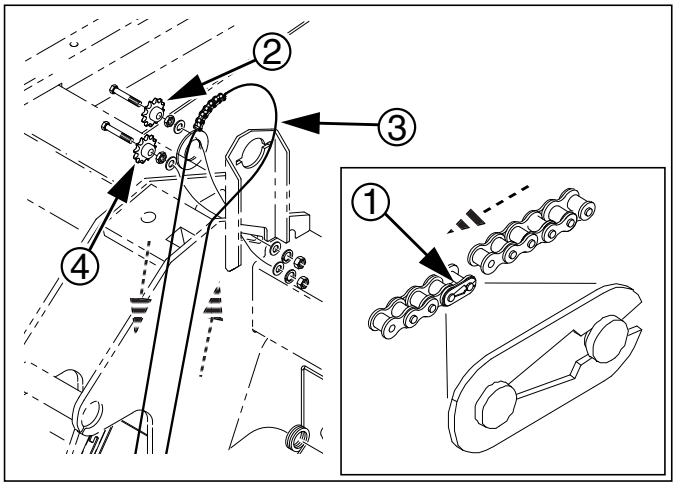

Figure 30
Re-mount Chain

29445
26482

Update Close-Out

93. Raise drill. Raise openers. Move drill forward and backward, checking drive chain motion at ground drives.

94. In field conditions, lower openers, pull forward and check for consistent drive operation. Re-check chain slack.

Dual Gauge Wheel Operation

Updating the spindle, or upgrading from single to dual-wheel ground drive, has no effect on drill Operations or Adjustments. In particular, the gauge wheel revolutions per area for calibration is unchanged.

Gauge Wheel Maintenance

Updating the spindle has no effect on drill maintenance, other than that four bearings are freshly re-packed.

If the tire size/type changed during the update, the recommended tire pressure and wheel bolt torque may now be different than for the previous tires and wheels.

Appendix

Torque Values

Bolt Size	Bolt Head Identification: Grade 2		Grade 5		Grade 8	
in-tpi[1]	N-m[2]	ft-lb[3]	N-m	ft-lb	N-m	ft-lb
1/4-20	7.4	5.6	11	8	16	12
1/4-28	8.5	6	13	10	18	14
5/16-18	15	11	24	17	33	25
5/16-24	17	13	26	19	37	27
3/8-16	27	20	42	31	59	44
3/8-24	31	22	47	35	67	49
7/16-14	43	32	67	49	95	70
7/16-20	49	36	75	55	105	78
1/2-13	66	49	105	76	145	105
1/2-20	75	55	115	85	165	120
9/16-12	95	70	150	110	210	155
9/16-18	105	79	165	120	235	170
5/8-11	130	97	205	150	285	210
5/8-18	150	110	230	170	325	240
3/4-10	235	170	360	265	510	375
3/4-16	260	190	405	295	570	420
7/8-9	225	165	585	430	820	605
7/8-14	250	185	640	475	905	670
1-8	340	250	875	645	1230	910
1-12	370	275	955	705	1350	995
1 1/8-7	480	355	1080	795	1750	1290
1 1/8-12	540	395	1210	890	1960	1440
1 1/4-7	680	500	1520	1120	2460	1820
1 1/4-12	750	555	1680	1240	2730	2010
1 3/8-6	890	655	1990	1470	3230	2380
1 3/8-12	1010	745	2270	1670	3680	2710
1 1/2-6	1180	870	2640	1950	4290	3160
1 1/2-12	1330	980	2970	2190	4820	3560

Bolt Size	Bolt Head Identification: 5.8 Class 5.8		8.8 Class 8.8		10.9 Class 10.9	
mm x pitch[4]	N-m	ft-lb	N-m	ft-lb	N-m	ft-lb
M 5 X 0.8	4	3	6	5	9	7
M 6 X 1	7	5	11	8	15	11
M 8 X 1.25	17	12	26	19	36	27
M 8 X 1	18	13	28	21	39	29
M10 X 1.5	33	24	52	39	72	53
M10 X 0.75	39	29	61	45	85	62
M12 X 1.75	58	42	91	67	125	93
M12 X 1.5	60	44	95	70	130	97
M12 X 1	90	66	105	77	145	105
M14 X 2	92	68	145	105	200	150
M14 X 1.5	99	73	155	115	215	160
M16 X 2	145	105	225	165	315	230
M16 X 1.5	155	115	240	180	335	245
M18 X 2.5	195	145	310	230	405	300
M18 X 1.5	220	165	350	260	485	355
M20 X 2.5	280	205	440	325	610	450
M20 X 1.5	310	230	650	480	900	665
M24 X 3	480	355	760	560	1050	780
M24 X 2	525	390	830	610	1150	845
M30 X 3.5	960	705	1510	1120	2100	1550
M30 X 2	1060	785	1680	1240	2320	1710
M36 X 3.5	1730	1270	2650	1950	3660	2700
M36 X 2	1880	1380	2960	2190	4100	3220

1. in-tpi = nominal thread diameter in inches-threads per inch
2. N· m = newton-meters
3. ft-lb = foot pounds
4. mm x pitch = nominal thread diameter in millimeters x thread pitch

Torque tolerance + 0%, -15% of torquing values. Unless otherwise specified use torque values listed above.

New Parts

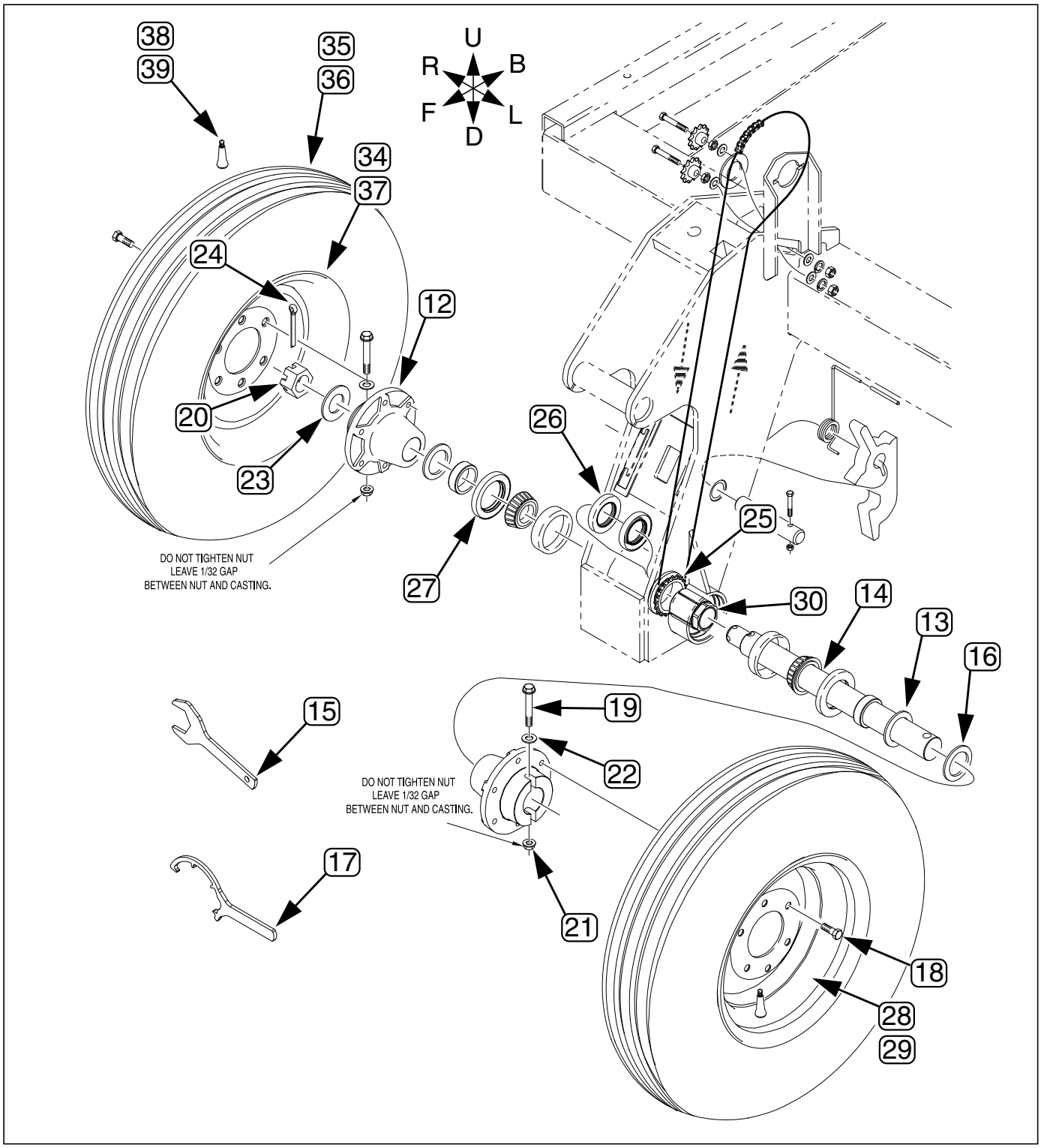

Figure 31
New Parts

29446

This manual covers the installation of several kits. Not all parts are in all kits.

Quantities are units (“ea”).

The part call-out numbers in this list match all Figures in these installation instructions. Part descriptions match those in your updated Parts Manual.

Kit Contents

Callout	Quantity in Kit			Part Number	Part Description
	195-060A	195-079A	195-122A		
11	1	1	1	195-080M	MANUAL MIN-TIL DRV SPINDLE KIT
12	2		2	152-390D	6-BOLT HEAVY DRIVE HUB 2 BORE
13	2[a]	2[a]	2[a]	195-234D	WASHER FLAT 2 ID X 2 5/8 X 10G
14	2	2	2	195-351D	SPNDL 2 X 24.7 1.5-12THD NOHLE
15	1	1	1	195-352D	WRENCH OPEN END 2 1/2
16	2[a]	2[a]	2[a]	195-354D	WASHER FLAT 2 ID X 2 5/8 X 16G
17	1	1	1	195-355D	WRENCH SPANNER 6 BOLT HUB
18	12		12	802-104C	BOLT WHEEL 1/2-20X1 90-DEG
19	2		2	802-687C	HHCS 5/8-11X4 SPTHD GR8
20	2		2	803-239C	NUT HEX SLOTTED 1 1/2-12 PLT
21	2		2	803-263C	NUT HEX FLANGE LOCK 5/8-11 PLT
22	2		2	804-095C	WASHER FLAT 5/8 HARD ASTMF436
23	2		2	804-182C	WASHER HARD 1 1/2 MILCARB GR8
24	2	1	2	805-148C	PIN COTTER 3/8 X 3 PLT
25	2	2	2	808-413C	SPKT 50B19 2.88 KEYLESS BORE
26	4	4	4	816-012C	SEAL 3.375 X 2.0 X.438 CR20125
27	4	4	4	816-138C	SEAL DBL LIP 2.5 ID X 3.881 OD
28			2	818-751C	DECAL CAUTION TIRE 32 PSI
29	2			838-092C	DECAL CAUTION TIRE 60PSI/85FT
30	2	1	2	891-137C	HUB KEYLESS 2.0 BORE X 2.88 OD
Wheel and Tire Bundles					
31			2	161-046K	6 BOLT WHL&TIRE 8 PLY TUBELESS
32	1			196-274K	RH TIRE/RIM 265/70B16.5 SKID 6
33	1			196-275K	LH TIRE/RIM 265/70B16.5 SKID 6
34			2	814-008C	WHEEL 8 X 15 X 6 BOLT
35			2	814-011C	TIRE 9.5 L X 15 8 PLY
36	2			814-207C	TIRE SKID ST 265/70B16.5 NHS
37	2			814-209C	RIM 16.5X8.25, 6 BLT 4.63 PILT
38	2			814-210C	VALVE STEM METAL TR-575 TUBLES
39			2	816-035C	VALVE STEM TR415X.625X1 1/4 LG

a. The installation may consume none, some, or all of these washers.

Existing Parts Affected

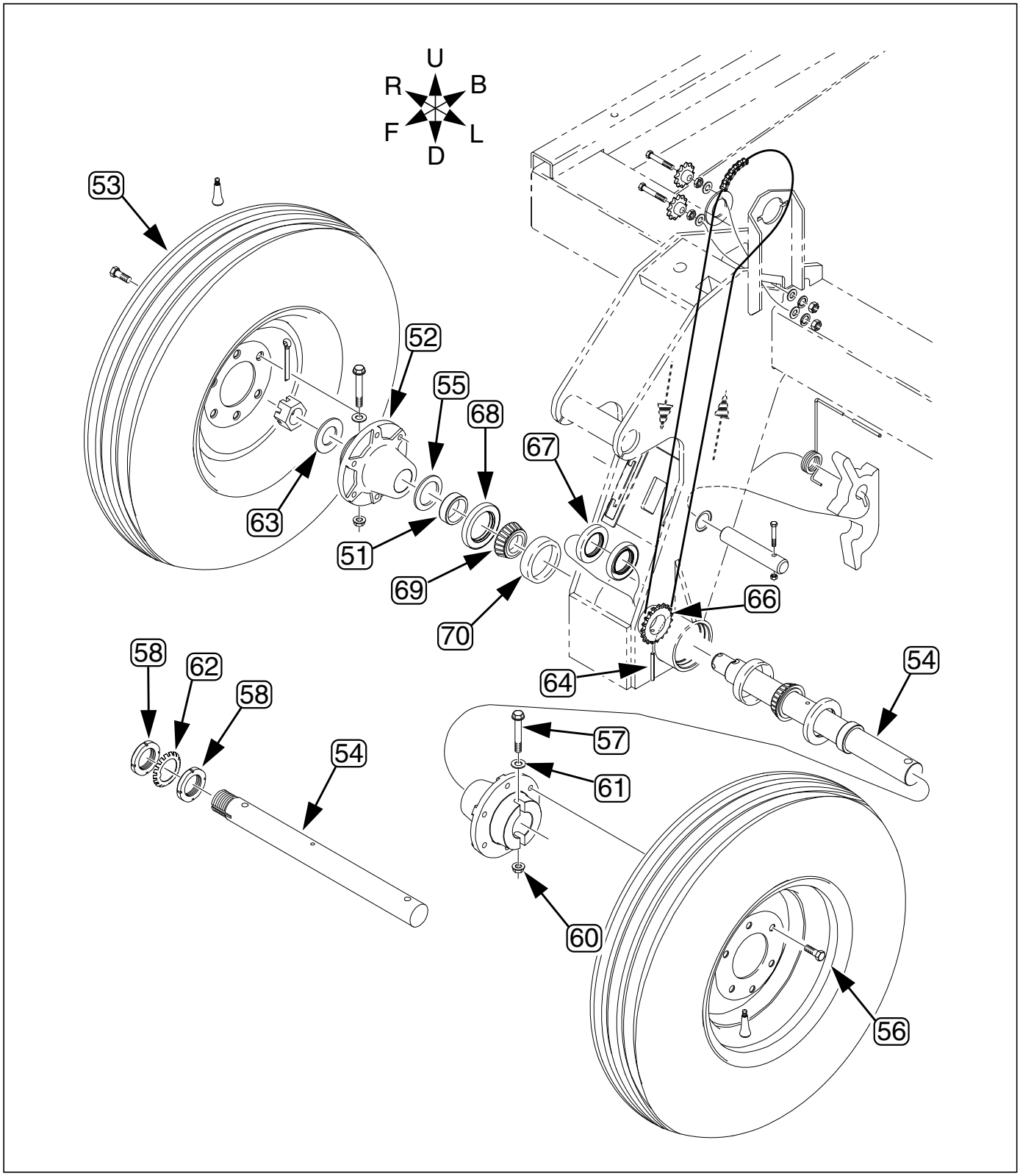

Figure 32
Existing Parts

29445

The following existing parts are involved in the kit installation. The Disposition column indicates whether the part is left in place, moved or not re-used.

The part call-out numbers in the list matches all Figures in the installation instructions. The general descriptions match those in your drill Parts manual.

The part numbers are representative of parts found on older drills, but may not exactly match those on your drill. This is not a concern for undamaged parts re-installed or not re-used at all. If you need to replace any parts not in the kit, older the current part number called for in the latest Parts manual.

Callout	Typical Part No.	Typical Part Description	Part Disposition
51	120-198D	AXLE SPACER TUBE	Removed and re-installed.
52	152-390D	6-BOLT HEAVY DRIVE HUB 2 BORE	Removed and re-installed.
53	161-046K	6 BOLT WHL&TIRE 8 PLY TUBELESS	Removed and re-installed.
54	195-229D	SPNDLE 2"W/5/8 CROSS HOLE DUAL	Removed. Not re-used.
55	195-234D	WASHER FLAT 2 ID X 2 5/8 X 10G	Removed. May be re-installed.
56	802-104C	BOLT WHEEL 1/2-20X1 90-DEG	Removed and re-installed.
57	802-687C	HHCS 5/8-11X4 SPTHD GR8	Removed and re-installed.
58	803-208C	NUT BRG LOCK, TN-10	Removed. Not re-used.
59	803-239C	NUT HEX SLOTTED 1 1/2-12 PLT	Removed and re-installed.
60	803-263C	NUT HEX FLANGE LOCK 5/8-11 PLT	Removed and re-installed.
61	804-095C	WASHER FLAT 5/8 HARD ASTMF436	Removed and re-installed.
62	804-098C	WASHER BRG LOCK, TW110	Removed. Not re-used.
63	804-182C	WASHER HARD 1 1/2 MILCARB GR8	Removed and re-installed.
64	805-030C	PIN ROLL 5/16 X 3 PLT	Removed. Not re-used.
65	805-148C	PIN COTTER 3/8 X 3 PLT	Removed. Not re-used.
66	808-287C	SPKT 50B19C2B W/5/16 HOLE	Removed. Not re-used.
67	816-012C	SEAL 3.375 X 2.0 X.438 CR20125	Removed. Not re-used.
68	816-138C	SEAL DBL LIP 2.5 ID X 3.881 OD	Removed. Not re-used.
69	822-117C	BRG CONE 2.00ID TIM33889	Removed and re-installed.
70	822-118C	BRG CUP 3.75OD TIM33821	Re-installed if removed

Abbreviations

10G	Ten Gauge
2S	Two Section
3S	Three Section
ASTM	American Society for Testing and Materials
BLT	Bolt
BRG	Bearing
CR	Chicago Rawhide (SKS brand)
DBL	Double
DEG	Degree
DRV	Drive
FLG	Flanged
FT	Foot (-Pounds)
GR8	Grade 8
GW	Gauge Wheel
HD	Heavy Duty
HEX	Hexagonal
HHCS	Hex Head Cap Screw (Bolt)
ID	Inside Diameter
IN	Inch
LG	Long
LH	Left Hand

MILCARB	Military Standard Carburized
MIN	Minimum
NHS	Non-Highway Service
NOHLE	No Hole
OD	Outside Diameter
PILT	Pilot
PLT	Plated
PSI	Pounds per Square Inch
RH	Right Hand
SKID ST	Skid Steer
SPNDL	Spindle
SPTHD	Special Thread
THD	Thread
TIM	Timken (brand)
TN	Timken (bearing) Nut
TUBLES	Tubeless
TW	Timken Washer
W/	with
WHL	Wheel
X	by

Great Plains Manufacturing, Inc.

Corporate Office P.O. Box 5060
Salina, Kansas 67402-5060 USA