Auxiliary Hydraulic Kit
Yield-Pro Planters

Used with:

- All model year YP1225 and YP1625 (pull type) planters

General Information

These instructions explain how to install the Auxiliary Hydraulic Kit. When the planter is not in motion, this kit enables the marker hydraulic circuit to be used to drive off-planter equipment, such as a seed auger.

Note: These instructions apply only to planters with markers (which are standard). If your initial planter order deleted the markers, have your dealer contact the factory for special instructions.

These instructions apply to:

Option Packages	Part Number
YP1225 Auxiliary Hydraulic Kit	401-435A
YP1625 Auxiliary Hydraulic Kit	407-441A

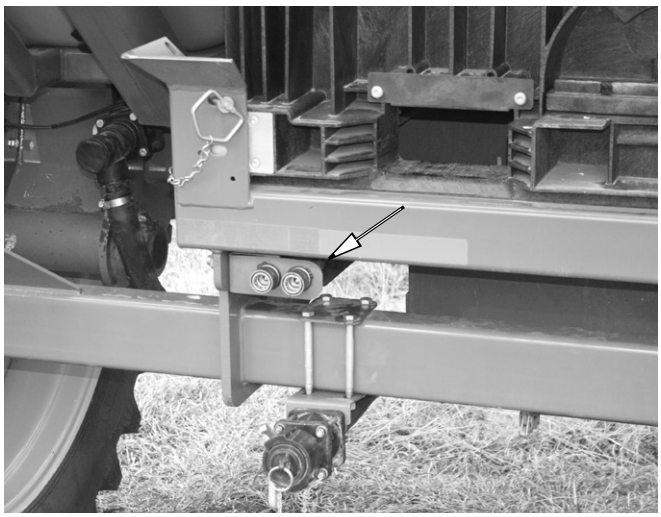

Figure 1 25394
Installed Auxiliary Ports

Before You Start

Each kit converts one planter.

For each kit, inventory the contents per the "**Parts Lists**" on page 13.

Review the instructions, to make sure the steps are understood and what tools are expected.

If necessary, move the planter to a dry well-lighted location suitable for disassembly.

1. Unfold and lower the planter. Although this kit can be installed on a folded and/or raised planter, access to the hose support bracket to be replaced, and the marker sequence valve, is much easier when unfolded/lowered.
2. Select the Marker circuit in the tractor. Set control to float (to drain pressure in that circuit). Shut down hydraulics.

Secure the tractor if left connected.

"Left" and "Right" are facing in the direction of machine travel.

① callouts are local to the current Figure(s)
⑪ callouts reference the parts lists on page 13.

Have the following tools at hand:

- Snap ring pliers
- Basic hand tools

Installation

Replace Existing Hose Support Bracket

Refer to Figure 2

3. Locate the outer-most air system standoff bracket ① on the left wing of the planter.
4. At the top of the bracket ①, at the seed tube support frame ②, remove and save two each:
   [39] NUT HEX 5/16-18 PLT
   [42] WASHER LOCK SPRING 5/16 PLT
   [38] HHCS 5/16-18X1 GR5

Note: Some older planters may have a lock nut and no lock washer.

5. At the bottom of the bracket ①, at the toolbar ③, remove and save two each:
   [40] NUT HEX 1/2-13 PLT
   [43] WASHER LOCK SPRING 1/2 PLT
   [37] HHCS 1/2-13X1 1/4 GR5.
6. Remove the existing bracket ①.
   It is not reused.

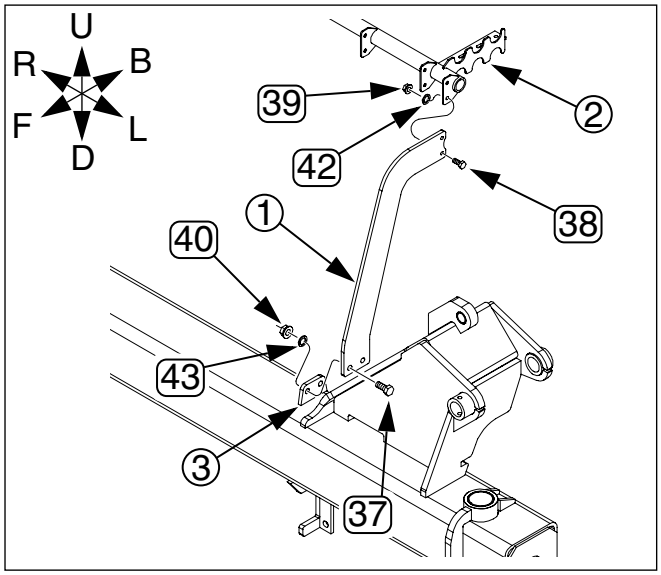

Figure 2 25395
Remove Old Bracket

Refer to Figure 3

7. Select one:
   [12] 403-382D AIR SYS BRKT F/ AUX HOSE KIT

Note: The new bracket has notches for the bolts that attach the new selector valve.

8. At the top of the bracket [12], at the seed tube support frame ②, re-install two each:
   [38] HHCS 5/16-18X1 GR5
   [42] WASHER LOCK SPRING 5/16 PLT
   [39] NUT HEX 5/16-18 PLT

Note: Some older planters may have a lock nut and no lock washer. Use the existing fasteners.

9. At the bottom of the bracket [12], at the toolbar ③, re-install two each:
   [37] HHCS 1/2-13X1 1/4 GR5
   [43] WASHER LOCK SPRING 1/2 PLT
   [40] NUT HEX 1/2-13 PLT

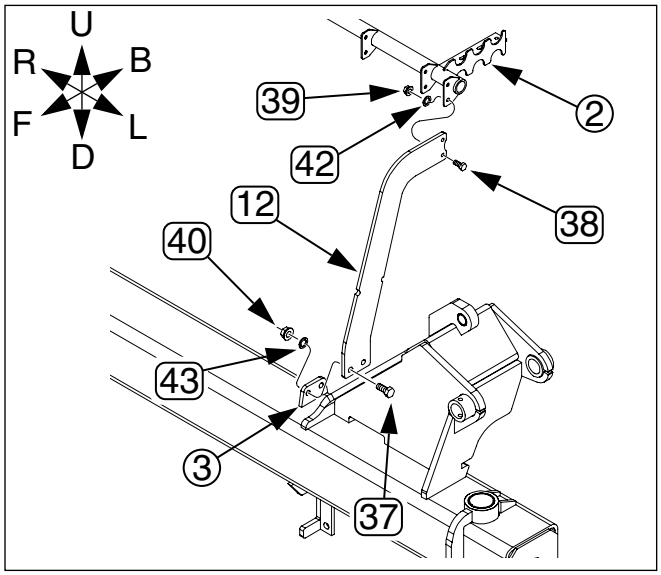

Figure 3 25396
Install New Bracket

Mount and Assemble Selector Valve

Refer to Figure 4

10. Select one:
    [28] 810-274C DOUBLE SELECTOR VALVE 3/4FORB
    [36] 848-083C DECAL AUX HYD SELECTOR VALVE
    and two each:
    [19] 802-024C HHCS 3/8-16X3 GR5
    [24] 804-011C WASHER FLAT 3/8 USS PLT
    [25] 804-013C WASHER LOCK SPRING 3/8 PLT
    [22] 803-014C NUT HEX 3/8-16 PLT
11. Mount the selector valve [28] on the new bracket [12] at the notches, using the $^{3}/_{8}$in fasteners.
12. De-grease the bracket surface immediately above the new valve, and apply the operating decal [36].

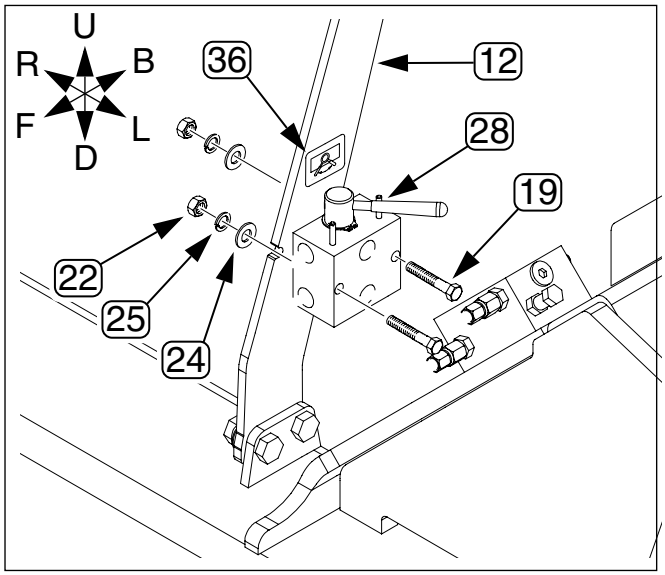

Figure 4 25397
Mount Selector Valve

Refer to Figure 5

13. Select two each:
    [29] 811-133C AD 9/16MJIC 3/4MORB
14. Loosely install the O-ring boss end of each adaptor [29] in one of the Front (marker) ports of valve [28].
15. Select four each:
    [30] 811-171C EL 3/4MORB 9/16MJIC
16. Loosely install the O-ring boss end of each elbow [30] in each remaining face (Left) and rear (Back) ports of the valve [28].

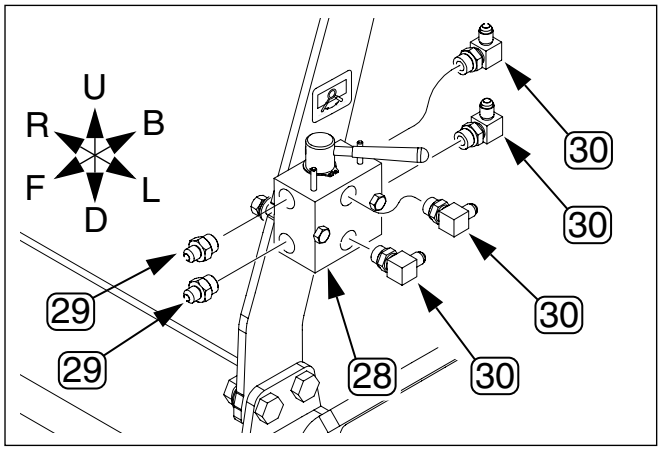

Figure 5 25398
Install Valve Fittings

Refer to Figure 6

17. Orient the Left (face) ports ① so that the JIC ends point Down and Front.
18. Orient the Back (Aux) ports ② so that the JIC end point Up and Right (toward machine center).

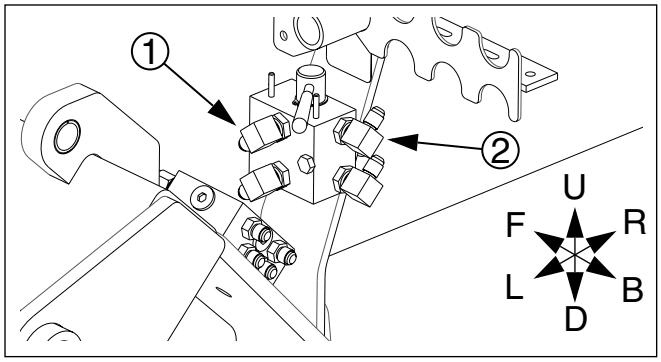

Figure 6 25399
Fitting Orientation

Install Wing Hose Mounts

Refer to Figure 7

19. Select six:
    (14) 411-272D AUX HYD HOSE MNT
    (27) 806-192C U-BOLT 5/16-18X1 1/2X2 1/2 RND
    and twelve each:
    (23) 804-009C WASHER LOCK SPRING 5/16 PLT
    (21) 803-008C NUT HEX 5/16-18 PLT
20. On the air system support frame ①, starting at a position about 12in inboard of the new bracket (12), mark locations for the six hose mounts (14) about equally spaced along the entire length of the frame ①.
21. Attach each mount (14) on the frame ①, using a U-bolt (27), two lock washers (23) and two nuts (21).

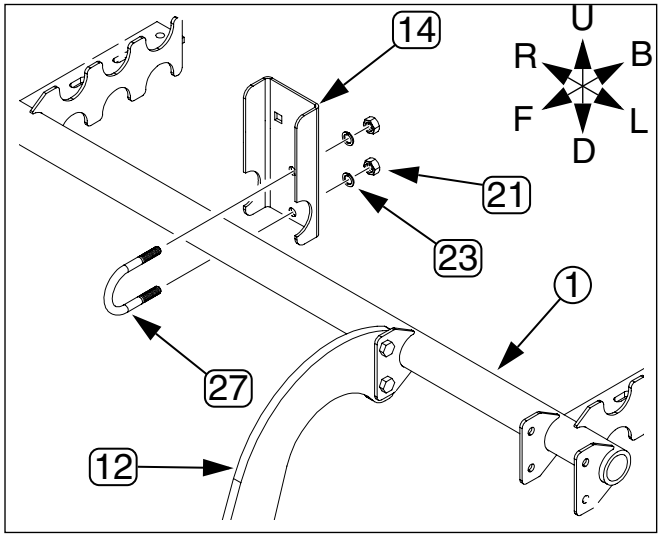

Figure 7 25400
Place Hose Mounts

Install Bulkhead

Refer to Figure 8

22. Locate the four bolts that attach the left side of the walkboard support to the rear frame. The top three of these ① (on the left side only) are replaced by new bolts in this kit. The bolts are left loose so that the bulkhead can be added at step 29.
23. Select three:
    (20) 802-212C HHCS 3/4-10X2 1/2 GR5
    (26) 804-025C WASHER FLAT 3/4 SAE PLT

Repeat step 24 through step 26 for each bolt.

IMPORTANT !

Do not remove and replace more than one bolt at a time.

The lower (4th) bolt ② is not disturbed at all.

24. Remove a $^{3}/_{4}$x10 2in GR5 bolt. Save the:
    (41) NUT HEX 3/4-10 PLT
    (44) WASHER LOCK SPRING 3/4 PLT
    The old bolt is not re-used.
25. Install one:
    (20) 802-212C HHCS 3/4-10X2 1/2 GR5
26. Loosely spin on one each:
    new (26) 804-025C WASHER FLAT 3/4 SAE PLT
    saved (44) WASHER LOCK SPRING 3/4 PLT
    saved (41) NUT HEX 3/4-10 PLT
27. Repeat step 24 - step 26 for all three new bolts.

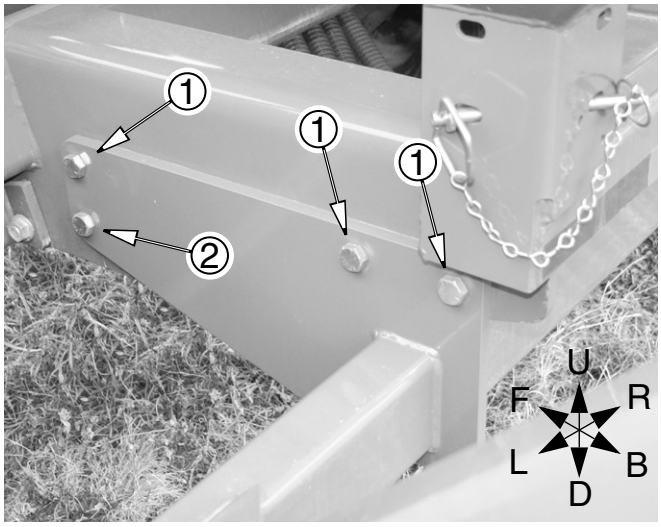

Figure 8 25401
Walkboard Support Bolts

Refer to Figure 9, which is a view back, left and up into the seed cart frame (with the airbox deleted for clarity)

28. Select one:
    [13] 411-271D BULKHEAD HOSE MNT
29. Place the bulkhead [13] keyholes ① over the rear two loose nuts, and press it flush against the seed cart frame ③.
30. Slide the bulkhead [13] forward until all three narrow openings are under the nuts [41] and washers [44]. Tighten nuts.

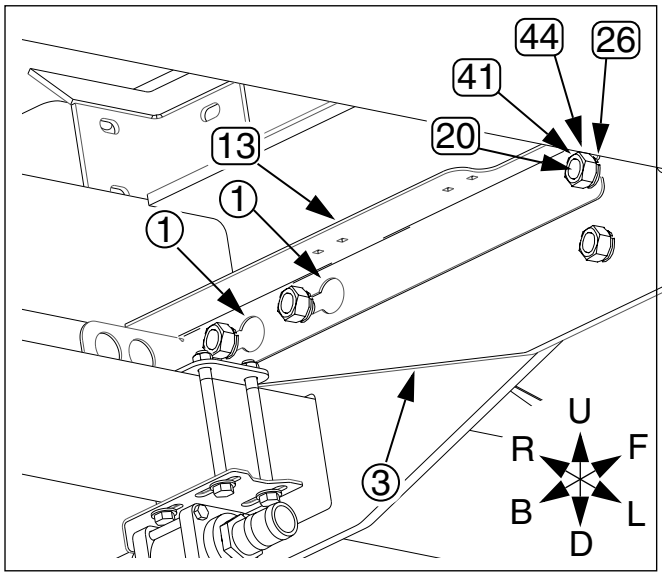

Figure 9
Install Bulkhead
25402

Assemble and Route Auxiliary Hoses

Refer to Figure 10

31. Select two of each, per YP model:
    YP1225:
    [32] 811-204C CP 3/4FORB QD BH
    [31] 841-365C HH3/8R2 300 9/16FJIC 3/4MORB
    YP1625:
    [32] 811-204C CP 3/4FORB QD BH
    [34] 811-960C HH3/8R2 360 9/16FJIC 3/4MORB
32. Insert the male O-ring Boss (MORB) end of the hydraulic hose ([31] or [34]) into the female O-Ring boss (FORB) end of the coupler [32]. Tighten.

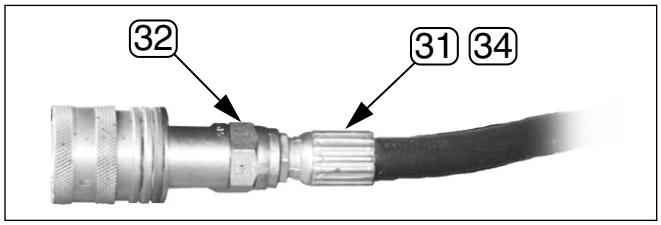

Figure 10
Assemble Port Hoses
25403

Refer to Figure 11

33. Route the hose ends with the couplers into the left side of the seed box frame, from above the seed tube rack. They will be tie-wrapped to the left seed tube bundle at step 65. Align them with that in mind.

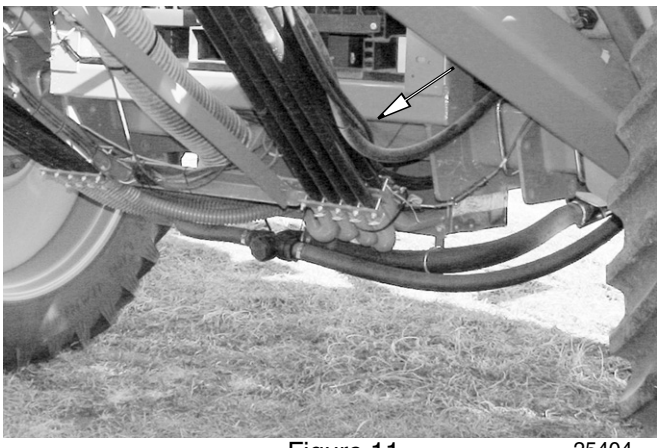

Figure 11
Route Hoses into Seed Frame
25404

Refer to Figure 12

34. Select four:
    (16) 800-004C SNAP RING EXT BASIC 1.880

Starting with the left port:

35. Attach each hose assembly (1) to the bulkhead (13) with a pair of snap rings (16). Each quick disconnect coupler (32) has two grooves. Align the coupler with one groove/ring behind the bulkhead and the other in front of it.

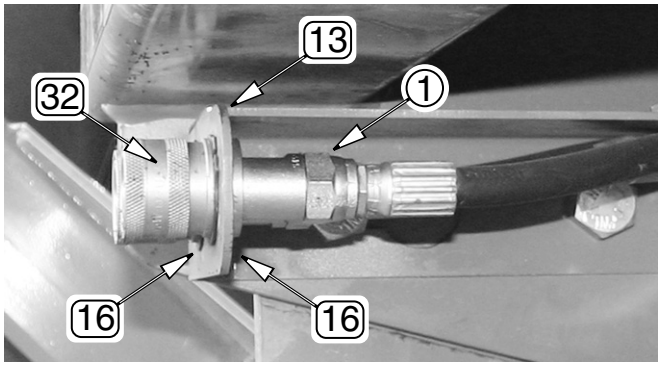

Figure 12 25405
Install Hoses at Bulkhead

Refer to Figure 13, which is an isolated view of the bulkhead

36. Select two:
    (15) 502-068D HYD HOSE CLAMP BRACKET
    and four each:
    (18) 802-009C RHSNB 5/16-18X1 1/4 GR5
    (23) 804-009C WASHER LOCK SPRING 5/16 PLT
    (21) 803-008C NUT HEX 5/16-18 PLT

37. Drop each round-head carriage bolt (18) in one of the four square holes in the top of the bulkhead (13).

38. Slide a clamp (15) over the bolt threads and loosely attach a lock washer (23) and nut (21).

39. Leave a small amount of slack in the hose at the couplings, and secure the clamps.

40. Select two (not shown):
    (35) 841-207C DUST CAP

41. Secure the retainer leads of the caps to any convenient point (such as the chain on the seed box lock pins), and cap the Auxiliary ports.

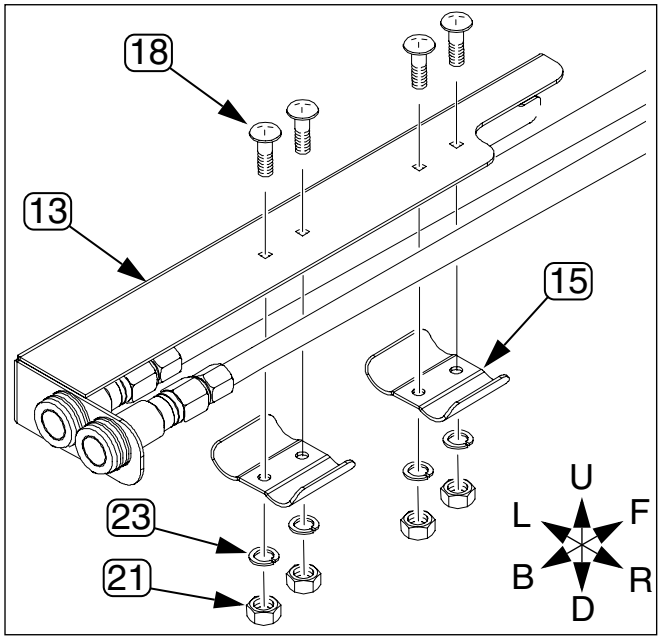

Figure 13 25406
Bulkhead Hose Clamps

Refer to Figure 15. Figure 14 shows the planter folded in order to depict the entire routing. Both Figures also show the hoses tied and clamped; not done at this step.

Route the hoses (31 or 34) from the seed cart to the selector valve

42. Align them with the hose rack ① between cart and wings.
43. Leave a small amount of slack (about 6in inches side to side) near the wing pivot area ②.

Note: There needs to be sufficient slack at the pivot point to prevent stress on the hose during folding and unfolding.

44. Lay them on top of the hose support frame ③ along the wings.
45. Leave all of the remaining slack at the wing end ④, near the new selector valve.

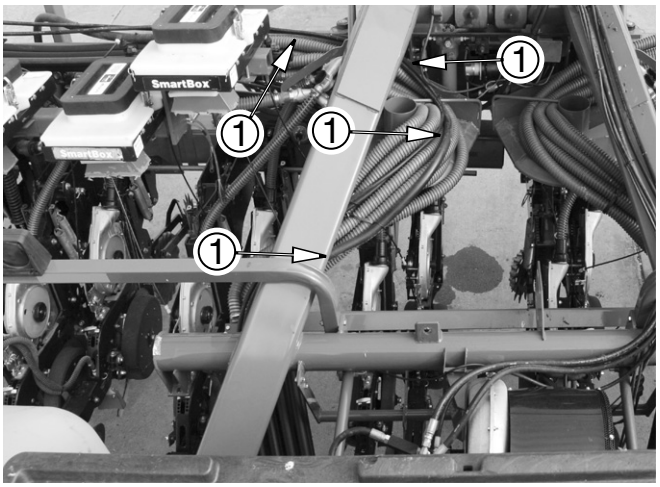

Figure 15 25418
Hoses at Unfolding

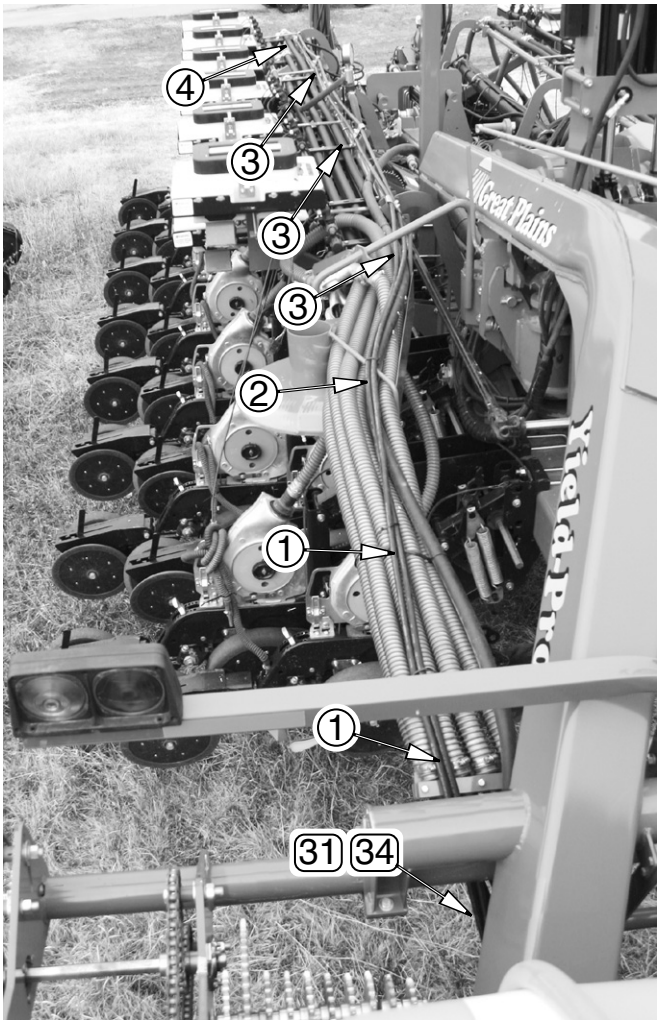

Figure 14 25407
Wing Hose Routing

Refer to Figure 16

46. Select one:
    15 502-068D HYD HOSE CLAMP BRACKET
    and two each:
    18 802-009C RHSNB 5/16-18X1 1/4 GR5
    23 804-009C WASHER LOCK SPRING 5/16 PLT
    21 803-008C NUT HEX 5/16-18 PLT
47. Insert each round-head carriage bolt 18 in one of the two square holes in a mount 14 installed during step 19 through step 21.
48. Slide a clamp 15 over the bolt threads and loosely attach a lock washer 23 and nut 21.
49. Place the hoses (31 or 34) in the clamp and finger-tighten the nuts.
50. Repeat step 46 through step 49 for each mount 14.

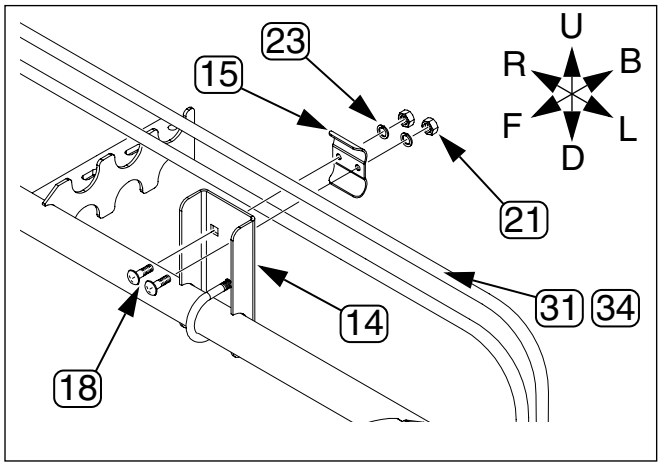

Figure 16 25408
Hoses in Wing Clamps

Connect Auxiliary Hoses to Valve

Refer to Figure 17

51. Connect the JIC end of the hydraulic hoses (31 or 34) to the Back (Aux) ports ① of valve 28. Tighten both the JIC and ORB connections at these two ports.

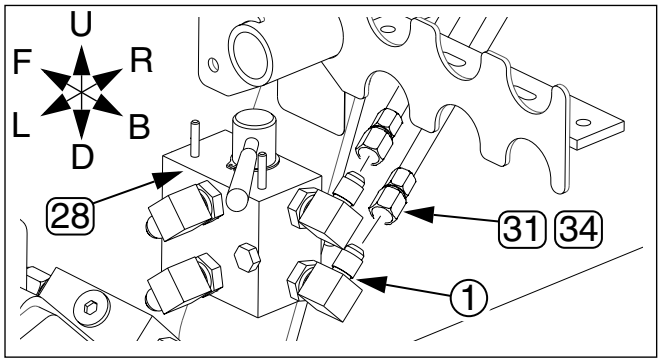

Figure 17
Aux Hoses at Valve
25409

Refer to Figure 18

52. Starting at the wing pivot, tighten the nuts at each hose clamp installed in step 46 through step 49. Leave about 1in slack between clamps.

Figure 18
Aux Hose Clamps
25410

Re-Connect Hydraulic Feed Lines

Avoid High Pressure Fluids

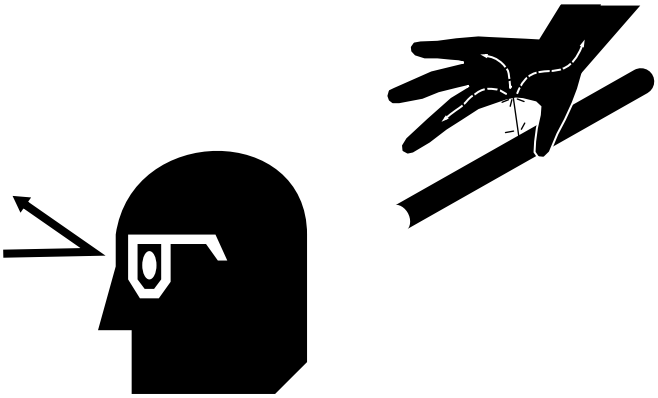

WARNING

Escaping fluid under pressure can penetrate the skin, causing serious injury. Avoid the hazard by relieving pressure before disconnecting hydraulic lines. Use a piece of paper or cardboard, NOT BODY PARTS, to check for suspected leaks. Wear protective gloves and safety glasses or goggles when working with hydraulic systems. If an accident occurs, see a doctor immediately. Any fluid injected into the skin must be surgically removed within a few hours or gangrene may result.

IMPORTANT !

When first opening either of the hoses at the existing marker sequence valve, do so slowly and carefully. Wear gloves. Bleed off pressure before completely removing connectors from fittings.

Although the marker circuit was floated at step 2, some hoses may still contain hydraulic fluid at high pressure.

Refer to Figure 19 (this page) and Figure 20 (page 10)

53. At the marker sequence valve ① disconnect the top hydraulic feed hose ③.
54. Slowly loosen both JIC connectors of the feed lines ③, ② at the Front of the sequence valve, and bleed off any residual pressure.
55. Disconnect the bottom hose ②, and reconnect it to the lower Left (face) port ④ of the selector valve [28]. Tighten both the ORB and the JIC connections at this port ④.
56. Disconnect the top hose ③, and reconnect it to the top Left (face) port ⑤ of the selector valve [28]. Tighten both the ORB and the JIC connections at this port ⑤.

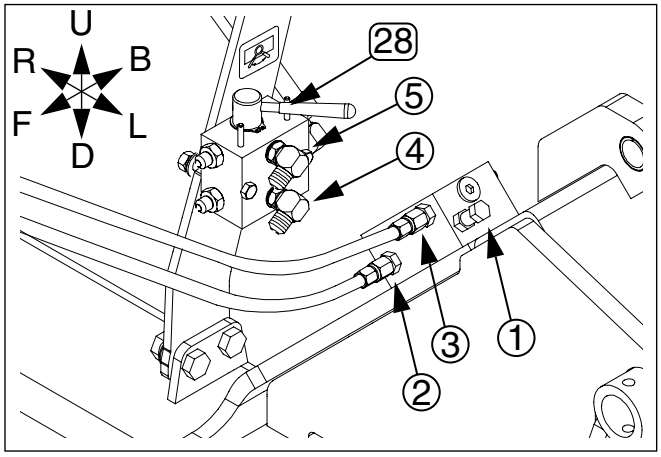

Figure 19 25411
Migrate Feed Lines

Reconnect Marker Sequence Valve

Refer to Figure 20

57. Select two:
    [33] 811-463C HH3/8R2 015 9/16FJIC 9/16FJIC
58. At the marker sequence valve ① connect a hose [33] to the bottom Front port ②. Tighten JIC fitting.
59. At the selector valve [28], connect the other end of that hose [33] to the bottom Front (marker) port ⑥. Tighten ORB and JIC fittings.
60. At the marker sequence valve ① connect a hose [33] to the top Front port ③. Tighten JIC fitting.
61. At the selector valve [28], connect the other end of that hose [33] to the top Front (marker) port ⑦. Tighten ORB and JIC fittings.

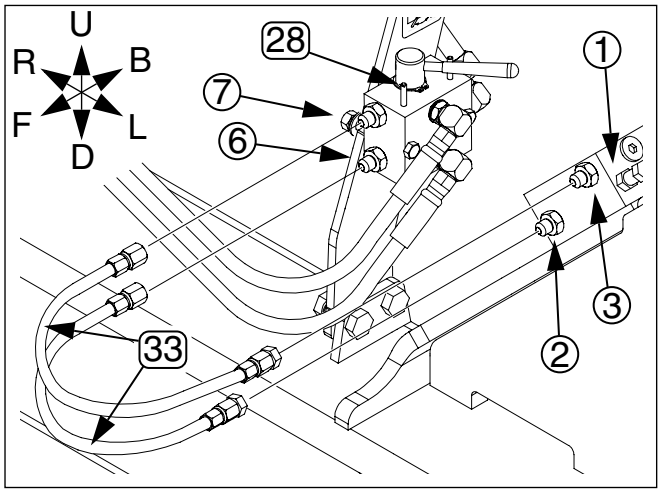

Figure 20
Re-Connect Sequencer
25412

Tie-Wrap Hoses

62. Select the set of:
    [17] 800-060C CABLE TIE .19X14.25 3DIA 50LB
63. Inspect the area at the selector/sequence valves, and tie any hoses that appear at risk of chaffing or getting caught in moving parts during folding/unfolding and planting.
64. Fold the planter. This ensures correct hose length at the wing pivot point.
65. Use the remaining ties to secure the new hoses ([31] or [34]) along the seed hose bundle and rack.

Initialize the System

66. Set the selector valve to Auxiliary

If the implement or tool for which this kit was installed cannot tolerate air in the lines, perform step 67 through step 69. Otherwise, skip to step 70.

67. Connect a male-to-male (Quick Disconnect) hydraulic hose between the two Auxiliary ports at the seed cart.
68. Activate and marker hydraulic circuit, and run it for 30 seconds in Extend, and 30 seconds in Retract, to clear air from the line. Check for leaks at all new and re-made connections.
69. Set circuit to Float and disconnect the hose.

If the implement for which this kit was installed is not sensitive to hydraulic flow direction, skip to step 73.

70. Connect the external implement for which the kit was installed (such as an auger). If the implement hoses are marked Extend/Retract or Base/Rod, connect the Extend/Base hose to the left Aux port.
71. Briefly set the marker circuit to Extend, and check implement operation.

    If operation is correct (for example, auger lifts), mark the left Aux port “Extend”, and skip to step 73.
72. If operation is incorrect at step 71, briefly set the marker circuit to Retract, and check implement operation.

    If operation is correct, mark the right Aux port “Extend”.
73. Set tractor marker circuit to Float, and disconnect implement at Aux ports.
74. Set selector valve to Marker.
75. Perform several Marker re-phase operations (see planter Operator’s Manual). Check for leaks at all new and re-made connections.

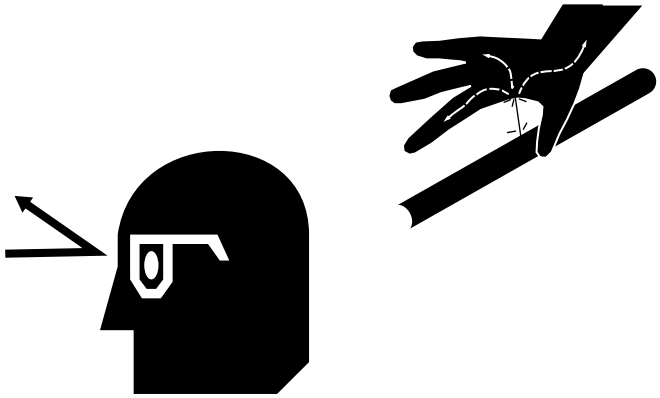

Using Auxiliary Hydraulic Circuit

WARNING

Never operate the selector valve with the marker hydraulic circuit active. Unexpected marker operations may result, with risk of serious injury or death. Operate the valve only with the marker circuit in Neutral or Float, or with hydraulics disabled.

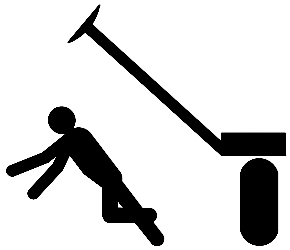

The optional auxiliary hydraulic kit includes a manual valve that diverts the marker hydraulic circuit to a pair of quick-connect ports at the back of the seed cart.

1. Extend or fold any marker that is raised. Return the cab control for that circuit to “off”.
2. Close any shut-off valve on your auger, and connect the auger to the auxiliary quick-connect ports at the back of the seed cart. If the auger hose is so labelled, connect the Extend hose to the Extend Aux port.
3. At the auxiliary selector valve (near marker sequence valve on left wing), move the handle from “Marker” to “Auxiliary”.
4. With no seed present, open the auger shutoff valve, and operate the cab control to determine which setting (“extend” or “retract”) turns the auger in the correct direction for seed lift.
5. Load seed.
6. Set marker circuit to Float. Shutoff any valve at auger. Return Aux valve control handle to “Marker” position. Disconnect auger.

Parts Lists

New Parts Included in the 401-435A and 401-441A Auxiliary Hydraulic Kits:

Callout	Quantity per Kit 401--435A	Quantity per Kit 401--441A	Part No.	Part Description
11	1	1	401-466M	This manual
12	1	1	403-382D	AIR SYS BRKT F/ AUX HOSE KIT
13	1	1	411-271D	BULKHEAD HOSE MNT
14	6	6	411-272D	AUX HYD HOSE MNT
15	8	8	502-068D	HYD HOSE CLAMP BRACKET
16	4	4	800-004C	SNAP RING EXT BASIC 1.880
17	6	6	800-060C	CABLE TIE .19X14.25 3DIA 50LB
18	16	16	802-009C	RHSNB 5/16-18X1 1/4 GR5
19	2	2	802-024C	HHCS 3/8-16X3 GR5
20	3	3	802-212C	HHCS 3/4-10X2 1/2 GR5
21	32	32	803-008C	NUT HEX 5/16-18 PLT
22	2	2	803-014C	NUT HEX 3/8-16 PLT
23	32	32	804-009C	WASHER LOCK SPRING 5/16 PLT
24	2	2	804-011C	WASHER FLAT 3/8 USS PLT
25	2	2	804-013C	WASHER LOCK SPRING 3/8 PLT
26	3	3	804-025C	WASHER FLAT 3/4 SAE PLT
27	6	6	806-192C	U-BOLT 5/16-18X1 1/2X2 1/2 RND
28	1	1	810-274C	DOUBLE SELECTOR VALVE 3/4FORB
29	2	2	811-133C	AD 9/16MJIC 3/4MORB
30	4	4	811-171C	EL 3/4MORB 9/16MJIC
31	2	0	841-365C	HH3/8R2 300 9/16FJIC 3/4MORB
32	2	2	811-204C	CP 3/4FORB QD BH
33	2	2	811-463C	HH3/8R2 015 9/16FJIC 9/16FJIC
34	0	2	811-960C	HH3/8R2 360 9/16FJIC 3/4MORB
35	2	2	841-207C	DUST CAP
36	1	1	848-083C	DECAL AUX HYD SELECTOR VALVE

Existing Parts Removed, Saved and Re-Used:

Callout	Quantity per Planter YP1225	Quantity per Planter YP1625	Reference Part No.	Part Description
37	2	2	802-034C	HHCS 1/2-13X1 1/4 GR5
38	2	2	802-159C	HHCS 5/16-18X1 GR5
39	2	2	803-008C	NUT HEX 5/16-18 PLT
40	2	2	803-020C	NUT HEX 1/2-13 PLT
41	6	6	803-027C	NUT HEX 3/4-10 PLT
42	2	2	804-009C	WASHER LOCK SPRING 5/16 PLT
43	2	2	804-015C	WASHER LOCK SPRING 1/2 PLT
44	6	6	804-023C	WASHER LOCK SPRING 3/4 PLT

Reference Information

Abbreviations

AD	Adaptor
CP	Coupler
EL	Elbow
GR5	Grade 5
HH	Hydraulic Hose
HHCS	Hex Head Cap Screw (Bolt)
JIC	Joint Industry Conference
ORB	O-Ring Boss
RHSNB	Round Head Square Neck Bolt

Connector Identification

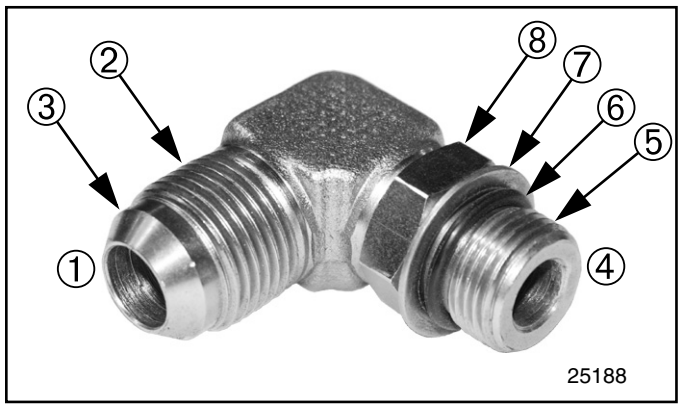

① **JIC** - Joint Industry Conference (SAE J514)
Note straiight threads ② and the
37° cone ③ on “M” fittings (or 37° flare on “F”).

④ **ORB** - O-Ring Boss (SAE J514)
Note the straight threads ⑤ and,
elastomer O-Ring ⑥.
Fittings needing orientation, such as the ell above,
also have a washer ⑦ and
jam nut ⑧ (“adjustable thread port stud”)

Torque Values		
Fastener/Fitting	**Ft-Lbs**	**N-m**
5⁄16-18 GR5	17	24
3⁄8-16 GR5	31	42
1⁄2-13 GR5	76	105
9⁄16 JIC	18-20	24-27
9⁄16 ORB w/jam nut	12-16	16-22
9⁄16 ORB straight	18-24	24-32
3⁄4-10 GR5	265	360

Great Plains Manufacturing, Inc.

Corporate Office: PO Box 5060
Salina, KS 67402-5060 USA