Operating, Maintenance, and Installation Instructions

Great Plains Manufacturing, Inc.
www.greatplainsmfg.com

PTO Pump Accessory for 2- & 3-Section Yield-Pro® Planters

Read the installation manual entirely. When you see this symbol, the subsequent instructions and warnings are serious - follow without exception. Your life and the lives of others depend on it!

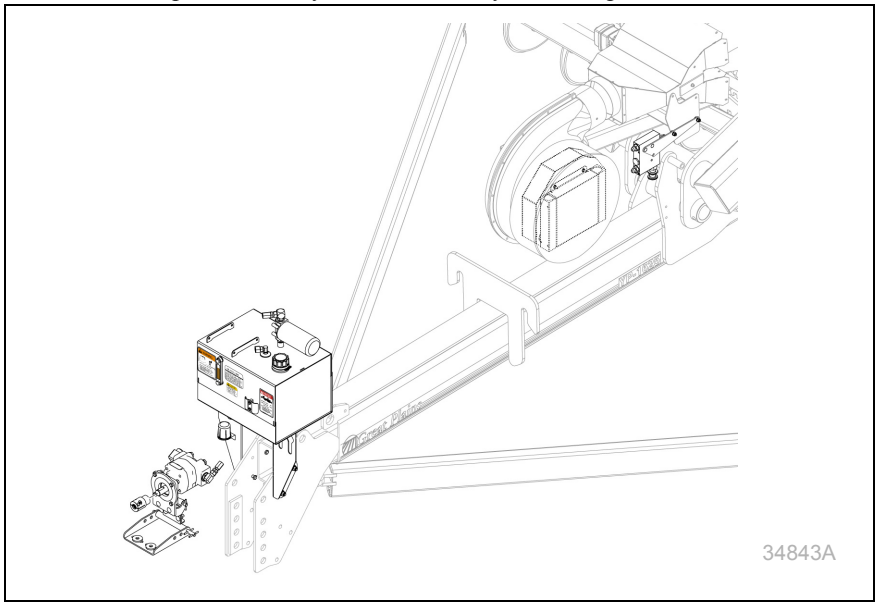

Cover illustration shows only selected components for one kit, and the coupler, which is ordered separately. Manual illustrations may show various Yield-Pro® planter models and configurations where installation details are identical for the immediate topic.

ORIGINAL INSTRUCTIONS

EN

© Copyright 2019 Printed 2019-04-24 411-015M

Table of Contents

Important Safety Information....1
PTO-Specific Hazards....1
Using PTO Safely....2
Safety Decals....4
Introduction....6
Description of Unit....6
Kits Covered....6
Suitable Applications....6
Related Items....6
PTO Coupler....6
Hydraulic Tongue Extension....6
Compressor Relocation Kits....6
Using This Manual....7
Definitions....7
Call-Outs....7
Further Assistance....7
PTO Operation....8
Tractor Requirements....8
Type 2 PTO Clearance....8
1000 rpm Type 3 PTO Clearance....9
Prepare the PTO Pump....9
PTO Pump Fittings....9
Assembling the Pumping Mounting Assembly....10
Installing the Pump Mounting Assembly....11
Install Coupler....11
Prepare the Tractor....12
Installing the PTO Pump....13
Check Hydraulics....14
Check Oil Level....14
Inspect Hoses and Fittings....14
Starting the Pump....14
About the Flow Control Valve....15
Flow Control Page Reference....15
Flow Adjust: Hydraulic Drive Center-Fill IntelliAg® Air-Pro® Planters....17
Flow Adjust: Ground Drive IntelliAg® Center-Fill Planters....18
Flow Adjust: Ground Drive Row-Hopper Air-Pro® (Meter-Only) Planters....19
Flow: Ground Drive Row-Hopper Air-Pro® Dry Fertilizer Planters....20
Flow Adjust: Hydraulic Drive IntelliAg® Singulator Plus™ & Finger Pick-Up Planters....21
Flow: Ground Drive Row Hopper Finger Pick-Up & Brush Meter Planters....22
PTO Unhitching....23
PTO Troubleshooting....24
PTO Maintenance....25
Oil and Filter Change....25
Oil Fill....25
Oil Specification....25
Oil and Filter Change....25
Lubrication and Scheduled Maintenance....26
Appendix A - Installation....27
Compatible Planters....28
Install First or Only Compressor....43
Second Compressor, 1625AH, YP12/16....44
Second Compressor, YP24/30/40/44....44
Hydraulic Hitch Extension....51
Appendix R - Reference....87
Torque Values....87
Hydraulic Fitting Torque....88
Connector Identification....88
Abbreviations....89
Parts....90

© Copyright 2013, 2014, 2015, 2016, 2017, 2019 All rights Reserved

Great Plains Manufacturing, Inc. provides this publication “as is” without warranty of any kind, either expressed or implied. While every precaution has been taken in the preparation of this manual, Great Plains Manufacturing, Inc. assumes no responsibility for errors or omissions. Neither is any liability assumed for damages resulting from the use of the information contained herein. Great Plains Manufacturing, Inc. reserves the right to revise and improve its products as it sees fit. This publication describes the state of this product at the time of its publication, and may not reflect the product in the future.

Trademarks of Great Plains Manufacturing, Inc. include: AccuShot, Max-Chisel, Row-Pro, Singulator Plus, Short Disk, Swath Command, Terra-Tine, Ultra-Chisel, and X-Press.
Registered Trademarks of Great Plains Manufacturing, Inc. include: Air-Pro, Clear-Shot, Discovator, Great Plains, Land Pride, MeterCone, Nutri-Pro, Seed-Lok, Solid Stand, Terra-Guard, Turbo-Chisel, Turbo-Chopper, Turbo-Max, Turbo-Till, Ultra-Till, Whirlfilter, and Yield-Pro.
Brand and Product Names that appear and are owned by others are trademarks of their respective owners.

Printed in the United States of America

Important Safety Information

PTO-Specific Hazards

Even if you are experienced in PTO operations, review the "**Using PTO Safely**" topic on page 2. Topics in this manual dealing with PTO hazards include this PTO alert symbol and the standard alert symbol below.
PTO hazards include:

- ***Entanglement:***
  resulting in abrasions, lacerations, crushing, dismemberment or death. Loose clothing, cuffs, frays, laces, coattails, drawstrings, hair or scarves are taken up by a PTO faster than you can react, and with overpowering torque.
- ***Flailing machinery:***
  resulting from an unsecured torque arm, resulting in serious injury or death.
- ***High pressure fluid sprays:***
  due to hydraulic hose failure, resulting from PTO shaft over-speed or damaged hoses.

Look for Safety Symbol

The SAFETY ALERT SYMBOL indicates there is a potential hazard to personal safety involved and extra safety precaution must be taken. When you see this symbol, be alert and carefully read the message that follows it. In addition to design and configuration of equipment, hazard control and accident prevention are dependent upon the awareness, concern, prudence and proper training of personnel involved in the operation, transport, maintenance and storage of equipment.

Be Aware of Signal Words

Signal words designate a degree or level of hazard seriousness.

DANGER indicates an imminently hazardous situation which, if not avoided, will result in death or serious injury. This signal word is limited to the most extreme situations, typically for machine components that, for functional purposes, cannot be guarded.

WARNING indicates a potentially hazardous situation which, if not avoided, could result in death or serious injury, and includes hazards that are exposed when guards are removed. It may also be used to alert against unsafe practices.

CAUTION indicates a potentially hazardous situation which, if not avoided, may result in minor or moderate injury. It may also be used to alert against unsafe practices.

Using PTO Safely

The pump relies on PTO power to operate, and requires an adjustment at the planter while the PTO is running. The PTO pump is designed to work on a stub shaft PTO, leaving no exposed shaft in use.

- ▲ *Use only a tractor with an approved PTO master shield.*
- ▲ *Use all guards provide for the tractor PTO. Have minimal or NO shaft exposed after connecting the PTO pump.*
- ▲ *Use only a rear-facing PTO. The provided hoses and torque arms are not designed for use with a tractor-front or tractor-side PTO.*
- ▲ *Use only a 1000 rpm PTO, or an adjustable PTO set to 1000 rpm maximum. Running at a higher speed could result in equipment failure, and serious injury.*
- ▲ *Use only a PTO with the correct shaft and matching Great Plains coupler:*
  $1^{3}/_{4}$ inch (44.5 mm) 20-spline and 826-777C coupler
  $1^{3}/_{8}$ inch (35 mm) 21-spline and 826-778C coupler
- ▲ *Do not use any other adapter, coupler, driveline, extender or external gearbox.*
- ▲ *Use only a "live" or "independent" PTO. If the PTO only operates when the tractor is in motion, there is no safe way to set the fan speed.*
- ▲ *Ensure that all involved personnel are trained on PTO operations and hazards. Always know where all team members are before, during and after PTO operations.*
- ▲ *Allow only essential personnel near the PTO during setup, adjustment, operation and disconnection.*
- ▲ *Prior to PTO setup, remove any stray wire, rope or twine found nearby. Should a loose end encounter the PTO stub, it is taken up at over 14 feet per second, and could wrap around someone and pull them in.*
- ▲ *Wear only snug-fitting clothes, with no scarves, loose strings, frays, cords or ties, when working near a PTO. Tie long hair back or gather it up under a well-secured hat.*
- ▲ *Shut the tractor off for PTO connections or disconnections. Do not trust your life to clutches and throw-outs.*
- ▲ *A PTO shaft is a hazard at any speed, even when well below rated shaft rpm, coasting to a stop, or idling.*
- ▲ *Never step on or over the master shield or installed PTO pump.*
- ▲ *Be extra vigilant if any tractor PTO controls are external, and in proximity to the PTO.*
- ▲ *Elevate pump hose slack so that ground contact is not possible during transport or field operations.*
- ▲ *Keep all PTO safety decals clean and legible. Replace any that are faded or damaged.*

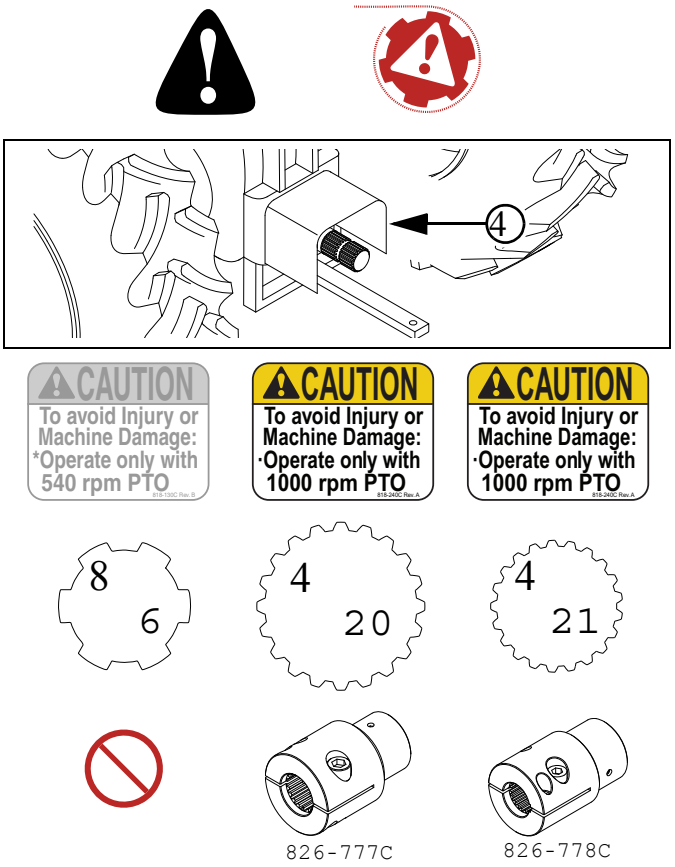

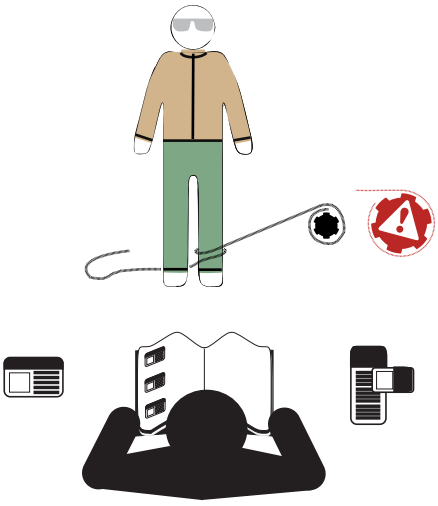

Prepare for Emergencies

- ▲ *Be prepared if a fire starts*
- ▲ *Keep a first aid kit and fire extinguisher handy.*
- ▲ *Keep emergency numbers for doctor, ambulance, hospital and fire department near phone.*

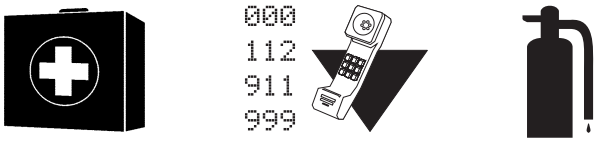

Be Familiar with Safety Decals

- ▲ *Read and understand "**Safety Decals**" in the Operator manual.*
- ▲ *Read all instructions noted on the decals.*
- ▲ *Keep decals clean. Replace damaged, faded and illegible decals.*

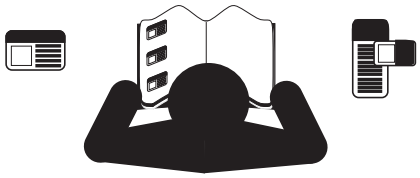

Protect Hearing

The PTO system requires adjustment of a flow control valve with one or two implement fans running. The valve is located near the fans, and the fans are loud.

- ▲ *Wear hearing protection when working near an operating hydraulic fan.*

Avoid High Pressure Fluids

Observe normal precautions for hitch hydraulic connections and disconnections. Escaping fluid under pressure can penetrate the skin, causing serious injury.

- ▲ *Avoid the hazard by relieving pressure before disconnecting hydraulic lines.*
- ▲ *Wear protective gloves and safety glasses or goggles when working with hydraulic systems.*
- ▲ *If an accident occurs, seek immediate medical assistance from a physician familiar with this type of injury.*

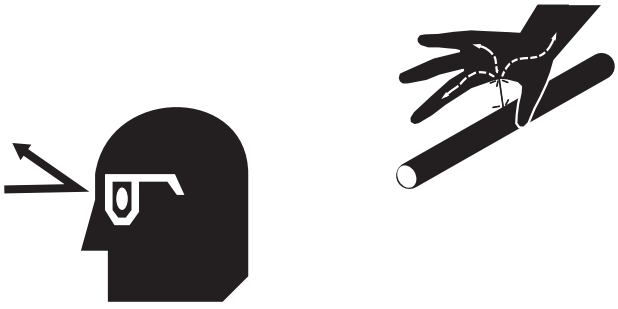

Practice Safe Maintenance

- ▲ *Understand procedure before doing work. Use proper tools and equipment. Refer to this manual for additional information.*
- ▲ *Work in a clean, dry area.*
- ▲ *Lower the planter, put tractor in park, turn off engine, and remove key before performing maintenance.*
- ▲ *Make sure all moving parts have stopped and all system pressure is relieved.*
- ▲ *Inspect all parts. Make sure parts are in good condition and installed properly.*
- ▲ *Remove buildup of grease, oil or debris.*
- ▲ *Remove all tools and unused parts from planter before operation.*

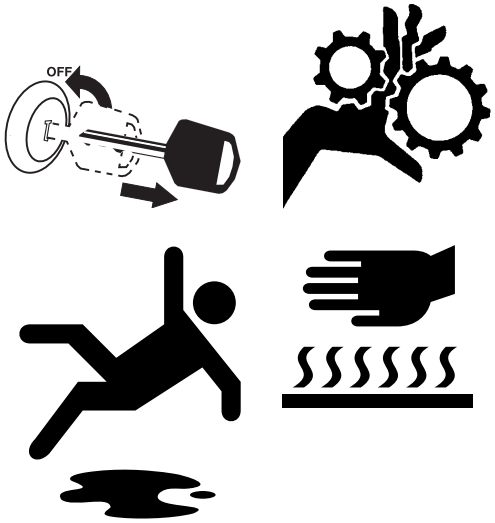

Safety At All Times

- *Thoroughly read and understand the instructions in this manual before operation. Read all instructions noted on the safety decals.*
- *Be familiar with all implement functions.*
- *Operate machinery from the driver's seat only.*
- *Do not leave implement unattended with tractor engine running.*
- *Wear snug-fitting clothing to avoid entanglement with moving parts.*

Safety Decals

Safety Decals

Kit components are shipped with all safety decals in place. They are intended to help you safely operate your implement.

- ▲ *Read and follow decal directions.*
- ▲ *Keep all safety decals clean and legible.*
- ▲ *Replace all damaged or missing decals. Order new decals from your Great Plains dealer. Refer to this section for proper decal placement.*
- ▲ *When ordering new parts or components, also request corresponding safety decals.*

To install new decals:

1. Clean the area on which the decal is to be placed.
2. Peel backing from decal. Press firmly on surface, being careful not to cause air bubbles under decal.

Danger Decals

858-030C

Danger: Rotating Driveline

Pull-Type on front face of oil reservoir,
3PYP/A on valve mount plate;
1 total

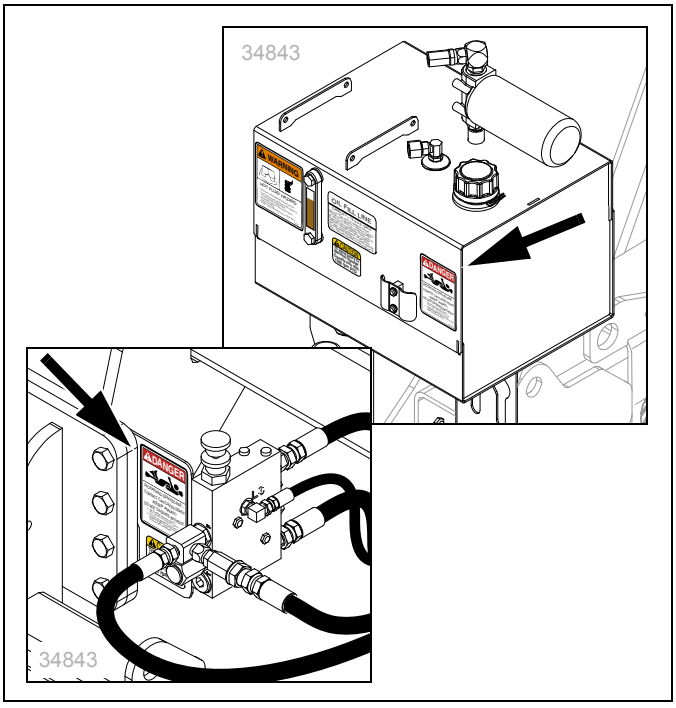

Warning Decals

858-004C

Warning: Hot Fluid

On front face of oil reservoir;
1 total

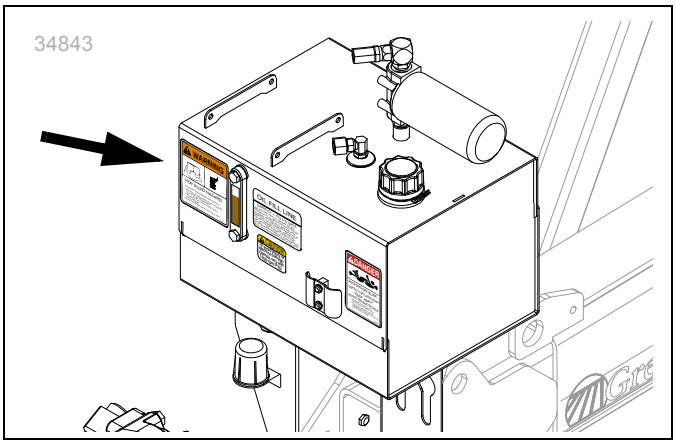

Caution Decals

818-240C

Caution: 1000 RPM PTO

Pull-Type on front face of oil reservoir,
3PYP/A on valve mount plate;
1 total

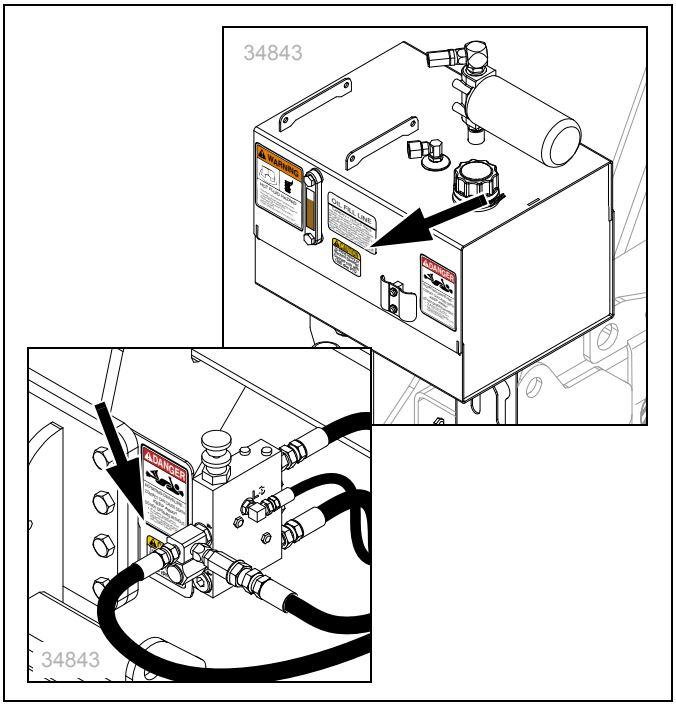

Introduction

Description of Unit

One of 15 dealer- or field-installed kits convert the planter's hydraulic motor power source from a tractor hydraulic remote circuit to tractor Power Take-Off (PTO).

Kits Covered

401-934A YP12,16 HYD DRV PTO KIT
401-935A YP12A,16A HYD DRV PTO KIT
401-936A YP12,16 GRND DRV PTO KIT
401-937A YP12A,16A GRND DRV PTO KIT
401-938A YP16F PTO KIT
401-939A 3PYP HYD DRV PTO KIT
401-940A 3PYPA HYD DRV PTO KIT
401-941A 3PYP GRND DRV PTO KIT
401-942A 3PYPA GRND DRV PTO KIT
401-943A YP24 PTO KIT
401-944A YP24A PTO KIT
401-945A YP30,40 PTO KIT
401-946A YP30A,40A PTO KIT
401-951A YP44A PTO KIT
411-014A YP24F PTO HYDRAULIC PUMP KIT
411-138A YP16AHL PTO KIT
411-147A YP16AHD PTO KIT

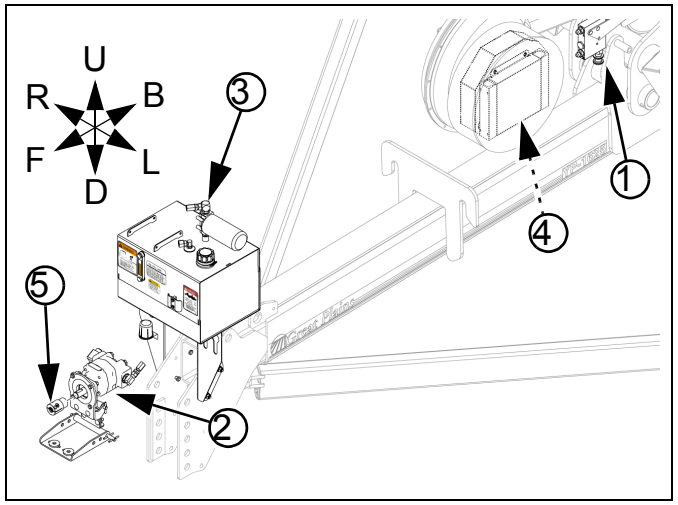

Figure 1: 34843
PTO Kit Major Components

If you are reviewing this manual prior to kit purchase, see the compatibility table on page 28.

There are separate kits covering most Great Plains large folding Yield-Pro® planters, with separate kits for ground drive and hydraulic drive seeding.

Kits are not presently available for planters with hydraulic fertilizer (Ace) pumps.

Single-section planters use a different family of PTO Pump kits, covered in manual 401-885M.

Suitable Applications

A PTO kit may be needed where:

- the tractor has an Open Center hydraulic system;
- the tractor has no remote port for the fan; or,
- the tractor is Closed Center, but the remotes offer insufficient oil flow to reliably operate the fan.

Refer to Figure 1

Each Yield-Pro® PTO Pump kit includes:

- a flow control valve assembly ① for setting fan rpm,
- a captive 1000 rpm PTO pump ②, with torque arm,
- an oil reservoir ③, with sight gauge, line filter and 15 gallon (57 liter) capacity (13.5 gallons/51 liters, used),
- one or more oil coolers ④, mounted inside fans, and;
- interconnecting hoses (not shown).

Related Items

PTO Coupler

Each kit requires separate purchase of a choice of couplers ⑤ to adapt your 20- or 21-spline PTO shaft to the keyed shaft of the pump:
(240) 826-777C 1 3/4-20 PTO COUPLER
(241) 826-778C 1 3/8-21 PTO COUPLER

Hydraulic Tongue Extension

Planters with hydraulic tongues require purchase of an extension hose (not shown) for this longer tongue.
YP12, YP16, YP2425, YP2425F, YP30, YP40:
(276) 841-996C HH1 1/4R4 48 1.63MJIC 1.63FJIC
YP2425A:
(277) 841-997C HH1.5R4 48 1 88 JIC 1.88F JIC
No extensions are required for YP4425A.

Compressor Relocation Kits

Planters with Row-Pro™ and/or Swath Command™ require separate purchase of one or two alternate compressor mount weldments (not shown).
First Compressor:
(102) 411-183A PTO AIR COMP MNT ASSEMBLY
Second Compressor, YP12, YP16:
(103) 411-184A YP12/16 2ND PTO AIR COMP MNT
Second Compressor, YP24, YP30, YP40:
(104) 411-185A YP30,40,44,24 2ND PTO AIR COMP

Using This Manual

This manual familiarizes you with safety, operation, adjustments, maintenance and assembly. Follow the recommendations to ensure safe and efficient operation.

Definitions

The following terms are used throughout this manual.

📖 Paragraphs in this format provide useful information related to the current topic.

NOTICE

Liability, Economic and Results Risks:
Paragraphs in this format present a crucial point of information related to the current topic. Read and follow the directions to: remain safe, avoid serious damage to equipment and ensure desired field results.

Right-hand and left-hand as used in this manual are determined by facing the direction the machine will travel while in use unless otherwise stated.

An orientation rose (shown at right) depicts Up, Right, Back, Down, Left and Front.

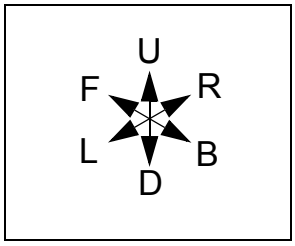

Call-Outs

① to ⑨ and ⓐ to ⓩ	Single-character callouts identify components in the currently referenced Figure or Figures. Numbers and letters may be reused for different items on other pages.
11 to 69	Two-digit callouts in the range 11 to 69 reference existing parts removed or reconnected. They are listed on page 92.
101 to 291	Three-digit callouts in the range 101 to 291 reference new parts. The descriptions match those on the parts, cartons, bags or item tags, as well as descriptions your updated Parts Manual.

The information in this manual is current at printing. Some parts may change to assure top performance.

Further Assistance

Great Plains Manufacturing, Inc. and your Great Plains dealer want you to be satisfied with your new Yield-Pro® PTO pump. If for any reason you do not understand any part of this manual or are otherwise dissatisfied, please take the following actions first:

1. Discuss the matter with your dealership service manager. Make sure they are aware of any problems so they can assist you.
2. If you are still unsatisfied, seek out the owner or general manager of the dealership.

If your dealer is unable to resolve the problem or the issue is parts related, please contact:

Great Plains Service Department
1525 E. North St.
P.O. Box 5060
Salina, KS 67402-5060

Or go to www.greatplainsag.com and follow the contact information at the bottom of your screen for our service department.

PTO Operation

Tractor Requirements

The Yield-Pro® PTO pump accessories require a tractor with:

Refer to Figure 2

- a rear-facing ASABE or ASAE Type 2 or Type 3 PTO stub shaft ⑤ with master shield ⑥
  1 3/4 inch (44.5 mm) 20-spline
  1 3/8 inch (35 mm) 21-spline
  clockwise rotation (as viewed from tractor rear, facing forward),
- a "live" or "independent" PTO drive system, that can be operated with the tractor stationary,
- a fixed or available shaft speed of 1000 rpm, and an available PTO power output of:
  20 hp (15 kW): Singulator Plus™ and 30 Series
  40 hp (30 kW): Air-Pro® w/hydraulic drive
  50 hp (37 kW): YP2425, and
- a drawbar ⑦ that engages the torque arm of the PTO pump assembly.

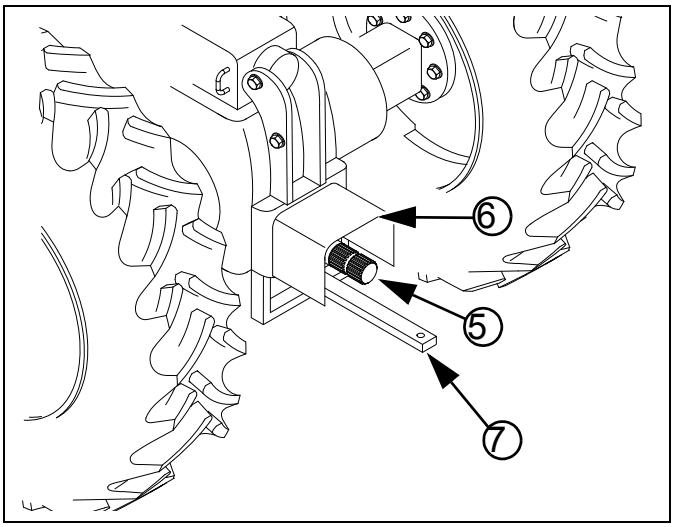

Figure 2: Tractor PTO 34842

Type 2 PTO Clearance

If the tractor PTO is not known to conform to Type 2 specifications, check the following pump-specific clearance dimensions:

Refer to Figure 3

a. Shaft to master shield top:
   3.5 inches (8.9 cm) minimum
   or hinged lid

b. Shaft to master shield sides:
   5.0 inches (12.7 cm) minimum

c. Shaft to drawbar top:
   9 inches (22.8 cm) minimum
   15 inches (38.1 cm) maximum
   It may be necessary to invert an offset drawbar, or relocate or remove any clevis installed on the drawbar.

d. Shaft to ground:
   16 inches (40.6 cm) minimum

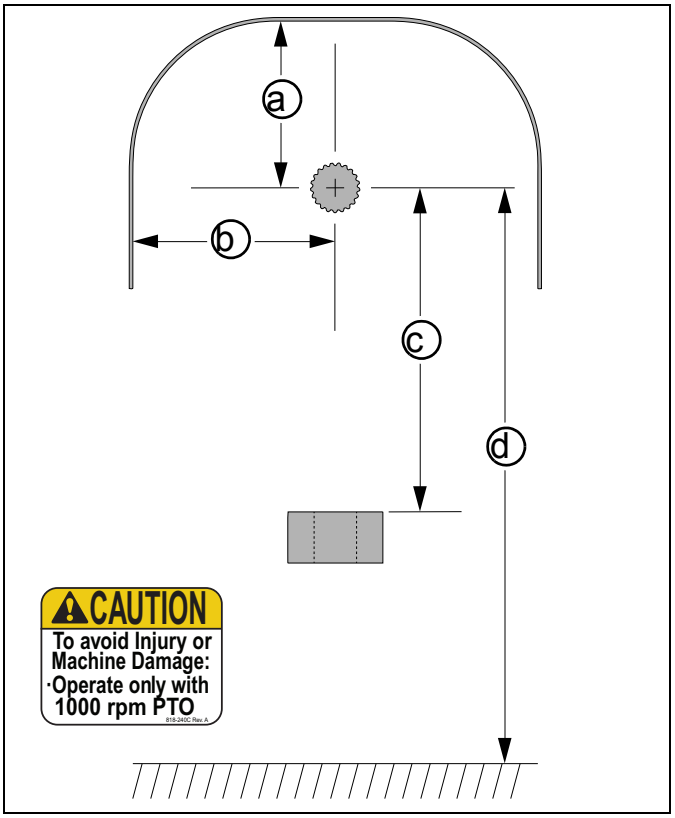

Figure 3: Type 2 PTO Clearances 34844

1000 rpm Type 3 PTO Clearance

If the tractor PTO is not known to conform to Type 3 specifications, check the following pump-specific clearance dimensions:

Refer to Figure 4

a. Shaft to master shield top:
5.9 inches (15.0 cm) minimum
or hinged lid

b. Shaft to master shield sides:
7.0 inches (17.8 cm) minimum

c. Shaft to drawbar top:
8.6 inches (22.0 cm) minimum
13.75 inches (35.0 cm) maximum
It may be necessary to invert an offset drawbar, or relocate or remove any clevis installed on the drawbar.

d. Shaft to ground:
16 inches (40.6 cm) minimum

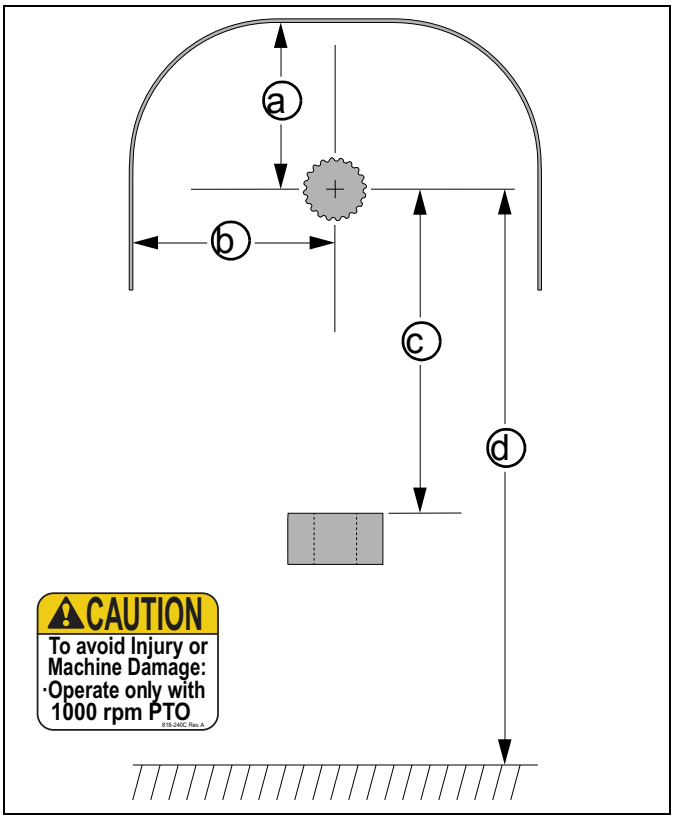

Figure 4: 34845
Type 3 PTO Clearances

Prepare the PTO Pump

PTO Pump Fittings

Refer to Figure 5

1. Rotate the pump ① as shown.
2. Install the EL 1-5/8MORB 1-5/8MJIC in the right-hand side of the pump. Rotate the fitting as shown and tighten.
3. Install the EL 1-5/16MORB 7/8MJIC in the left-hand side of the pump. Rotate the fitting as shown and tighten.
4. Install the AD 7/8F JIC 3/4MORB.
5. Install the CP 3/4FORB 3/4FORB.

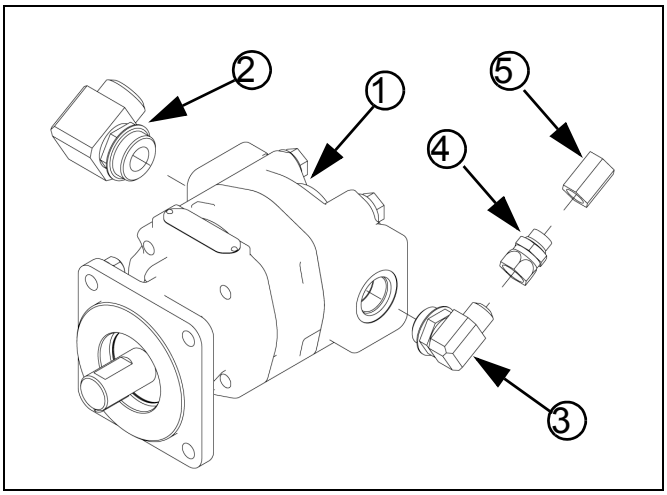

Figure 5: 36315
Secure Coupler to Pump

Assembling the Pumping Mounting Assembly

Refer to Figure 6

1. Find the short pin (311). Install a roll pin (312) in one end of the short pin.
2. Find the longer pin (313). Install two roll pins in one end of the longer pin.
3. Align the pump plate (314) with the offset plate (315). Make sure the ears on the offset plate are on top.
4. Install the $^{1}/_{2}$-13 plated RHSN bolts (316), flat washers (317), lock washers (318), and $^{1}/_{2}$-13 nuts (319).
5. Align the top adjustment bracket (320)between the ears of the offset plate. Make sure the flange on the top adjustment bracket is toward the front of the assembly.
6. Install the hairpin (321) in the other end of the short pin.
7. Align the bottom adjustment bracket (322) with the top attachment bracket. Install the $^{1}/_{2}$ plated RHSN bolts, flat washers, lock washers, and $^{1}/_{2}$-13 nuts. Do not tighten the nuts all the way.
8. Align the base plate (323) with a set of mounting holes in the lower adjustment bracket. Install the long pin.
9. Install the hairpin in the end of the long pin.
10. Keep the thick washers (324) with the pump mounting assembly. Use when installing the pump mounting assembly to the tractor.

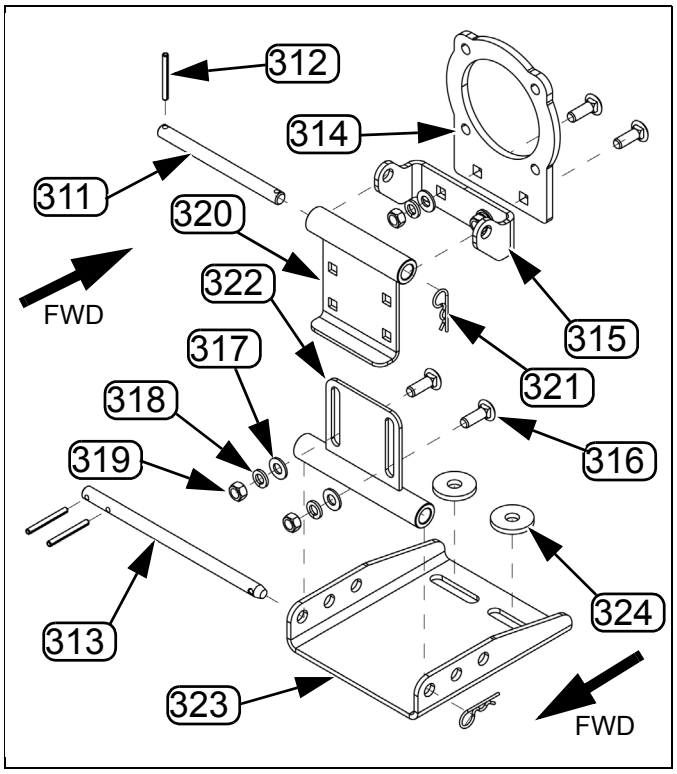

Figure 6:
Pump Mounting Assembly
68113

Installing the Pump Mounting Assembly

Refer to Figure 7

1. Rotate the PTO pump ① as shown.
2. Install the pump plate ② on the PTO pump as shown.
3. Install the four 1/2-12x2 GR5 HHCS③. Install 1/2 in lock washers ④ and the 1/2-13 plated nuts ⑤.
4. Tighten the nuts. See "**Torque Values**" on page 87.

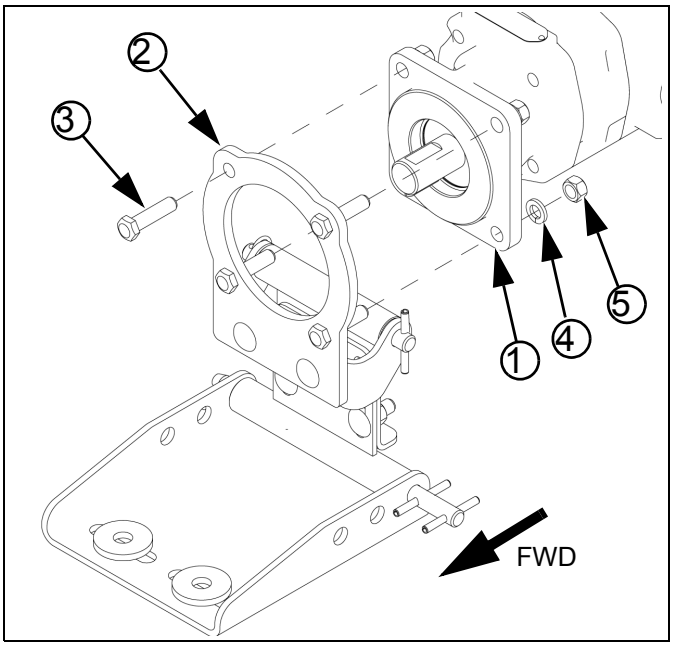

Figure 7: 68111
Pump Mounting Assembly to PTO Pump

Install Coupler

Refer to Figure 8

The 1000 rpm PTO kits require one of two tractor-specific couplers, not included with the PTO kit:
240 826-777C 1 3/4-20 PTO COUPLER
241 826-778C 1 3/8-21 PTO COUPLER

Refer to Figure 8 (showing coupler 826-778C)

1. Loosen both set screws (292 and 307) at the narrow end of the coupler. Note that they are different sizes.
2. Rotate the coupler until the internal keyway aligns with the key on the pump shaft. Slide the coupler onto the pump shaft.
3. Tighten both set screws to the Grade 5 torque specification for each thread size.

To remove or exchange a coupler at a later time, first dismount the pump assembly from the tractor PTO shaft, then loosen both set screws.

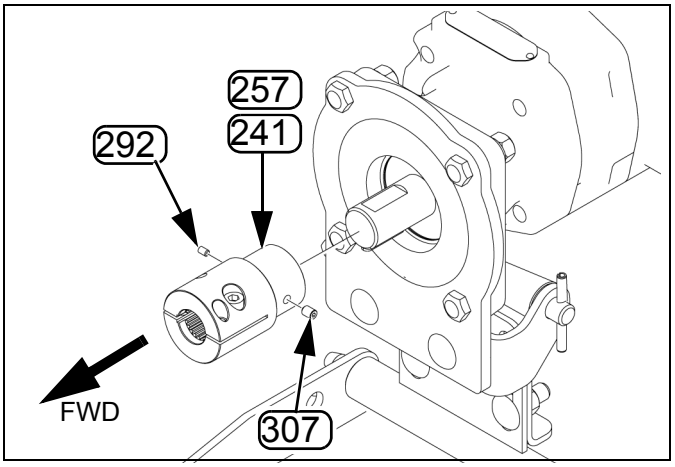

Figure 8: 68111
Secure Coupler to Pump

Prepare the Tractor

The pump may be installed before or after hitching the planter to the tractor. If the planter has a 3-point hitch, installing the pump first may be easier.

1. Back the tractor into close proximity to the planter (within pump hose reach of the PTO shaft).
2. Apply the parking bake, stop the engine, and take the key with you.
3. Make sure the PTO shaft and the drawbar are set at the correct height. See "**PTO Operation**" on page 8
4. Clear the PTO shaft of any pins or wires that might prevent the pump from fully seating on the shaft.

Refer to Figure 9

5. If the tractor has a single drawbar guide ①, do the following:

A. Remove the bolts ② or pins installed on either side of the drawbar ③.

B. Make sure the drawbar is in the center position.

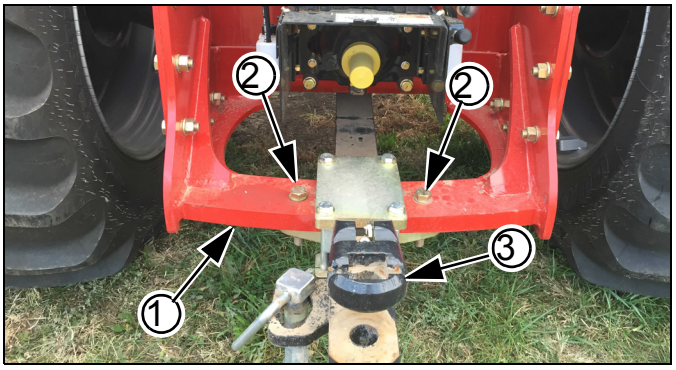

Figure 9: 68117
Tractor with Single Drawbar Guide

Refer to Figure 10

6. If the tractor has two drawbar guides ①, do the following:

A. Remove the bolts ② or pins installed on either side of the drawbar ③.

B. Make sure the drawbar is in the center position.

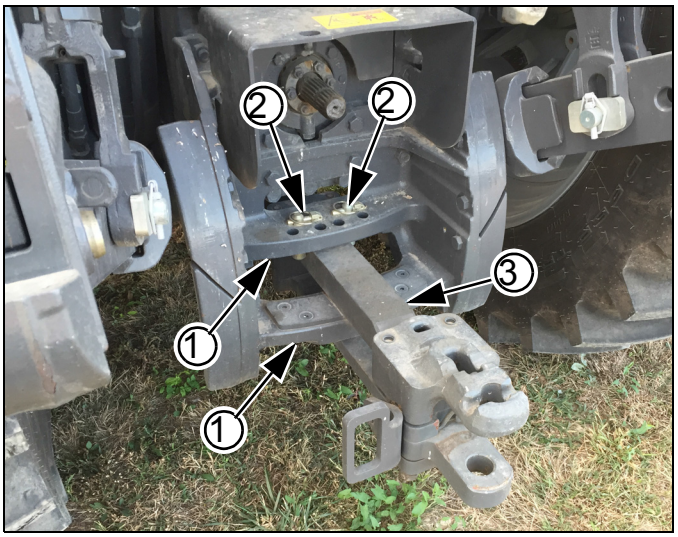

Figure 10: 36315
Tractor with Dual Drawbar Guide

Installing the PTO Pump

Refer to Figure 11

1. Completely remove the large socket head cap screws ① from the coupler ②.
2. If space is constrained inside the tractor PTO shield, rotate the coupler to an orientation that eases inserting and tightening of the cap screws.
3. Rotate the PTO pump ③ so the pump mounting assembly ④ is down.
4. Slide the coupler fully onto the PTO shaft ⑤.
5. Check the position of the base plate ⑥ of the pump mounting assembly.
   If the tractor has a single drawbar guide, make sure the base plate is on the top of the drawbar.
   If the tractor has dual drawbar guides, make sure the base plate is on the top drawbar guide.
6. Start one of the socket head cap screw into the larger counter-sunk clamping holes in the coupler.

📖 See *NOTICE* at right.

7. Adjust the position of the coupler on the shaft until the screw threads are in the PTO shaft groove ⑦. Thread screw in until finger tight.
8. Insert the other socket head cap screw in the other side of the coupler. Thread it until finger tight.
9. Pull and twist the pump assembly to verify that the socket head cap screws prevent sliding along the PTO shaft.
10. Tighten both cap screws to $^{1}/_{2}$-13 Grade 8 torque specification (105 foot-pounds, 145 N-m).

📖 When tightened, the screw heads must fully seat below the surface of the coupler.

11. Align the slotted holes in the base plate of the pump mounting assembly with the holes in the drawbar guide(s). Loosely install the bolts or pins removed earlier along with the thick washers ⑧ from the kit.

📖 If necessary, use longer fasteners.

12. Check the alignment of the pump mounting assembly and adjust as necessary. Make sure all of the bolts in the pump mounting assembly are tight.
13. Secure the bolts or pins in the drawbar guide(s)
14. Complete normal planter hitching.

Entanglement and Crushing Hazard:
Never perform any mechanical adjustment, PTO setup or hitching with the tractor running. Take no chances that the PTO might become active. Remove the key from the tractor. Entanglement or flailing equipment can cause serious injury or death faster than you can react.

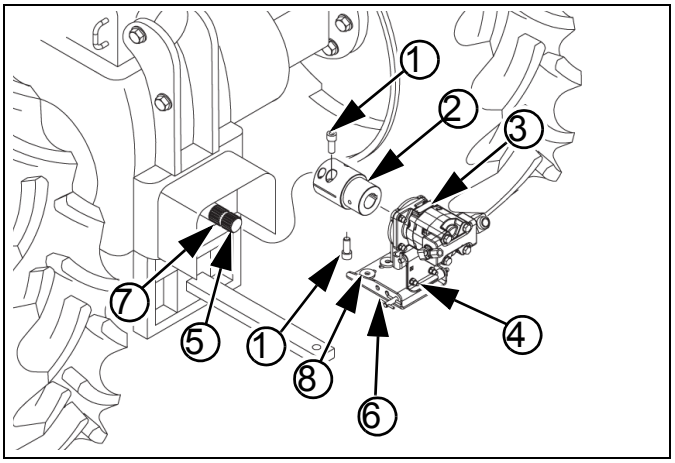

Figure 11: 68107
Mount PTO Pump

Entanglement and Flailing Equipment Hazards:
Do not use a driveline, shaft extension, adapter or external gearbox with the PTO pump. Use the pump, with a Great Plains coupler, only on a native 1000 rpm 20- or 21-spline stub shaft. Extra fittings create entanglement hazards. Fittings also destabilize the shaft, and may make it impossible to adequately secure the pump against torque and shaft slip.

NOTICE

Equipment Damage Risk:
Use the clamping holes ⑦. Do not use the drive out-holes ⑧ (the smaller forward holes that are threaded to the surface).Drive out holes are used only during dismount. The screws only partially thread into these holes. The holes do not adequately secure the pump to the shaft. The pump is likely to fall off if these holes are used for pump mounting.

Check Hydraulics

Check Oil Level

Refer to Figure 12

1. Verify that the planter is level front to back and side to side.
2. Inspect the sight gauge ① on the pump system reservoir. The oil level ② must be aligned with the center border of the OIL FILL LINE decal (858-029C).

⚠ WARNING

Hot Surface and Hot Fluid Hazards:
Assess the reservoir temperature before adjusting oil level. Draining excess hot oil could result in a severe burn. If the PTO has been operated recently, the oil temperature could be as high as 180·F (82·C).

3. Add or drain oil as needed to obtain the correct amount. Some adjustment is normally required with a new system, or after a filter change.

📖 The fill level dimension from reservoir bottom is:
ⓐ 10.73 inches (27.3 cm)
If the 858-029C decal requires replacement, adjust the top edge of the center border line to this height.

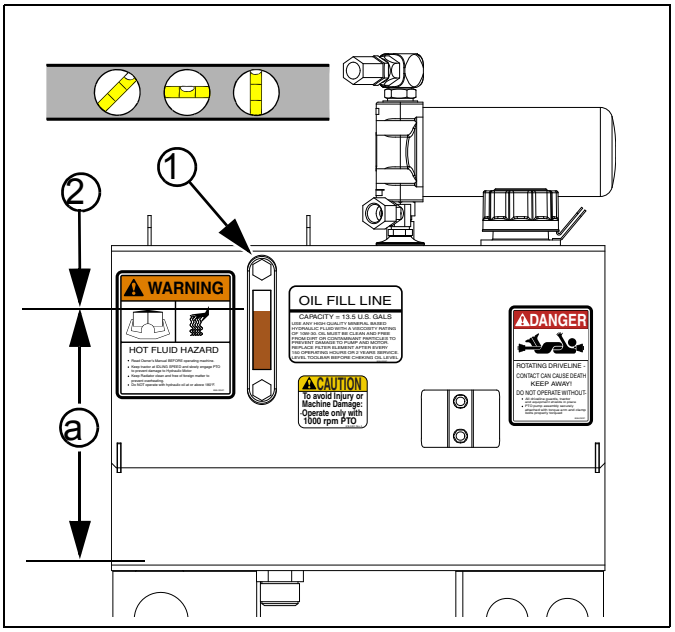

Figure 12: 34847
Check Oil Level

Inspect Hoses and Fittings

4. Check that all hydraulic fittings are tight and dry. Inspect all hoses for damage, wear and fatigue. Because the PTO pump system is closed, any visible fluid may be an indication of a leak.

Starting the Pump

While the planter is stationary, it may be necessary to briefly operate the pump for any of several reasons:

- verify system installation or PTO operation
- verify oil level with system fully charged
- set initial meter pressurization

Refer to Figure 13

1. If the system is adjusted, leave the flow control valve as-is.

   If the system is not yet adjusted, close the flow control valve to prevent fan motion. Turn the lock disc ① counter-clockwise to release the knob ②. Turn the knob fully clockwise to close the valve.
2. Clear the hitch area of non-essential persons. Check essential personnel for long hair, scarves, cords, frays, loose flaps and anything else that might get entangled. Clear the area of dangling or loose wires, straps, cord and other lines that might become entangled and pull someone in.

Entanglement and Crushing Hazard:
Use extreme caution in the hitch area when the PTO is operating.

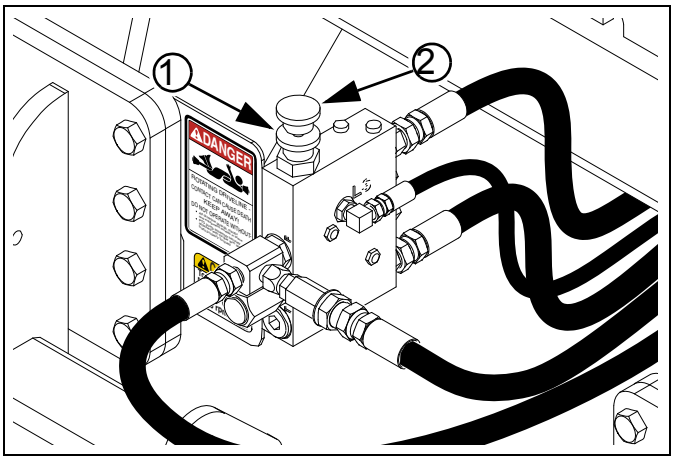

Figure 13: 34848
Flow Control Valve (3PYPA#56)

⚠ WARNING

High Pressure Fluid Hazard:

Watch for signs of fluid leaks. Escaping fluid under pressure can have sufficient pressure to penetrate the skin causing serious injury. Use a piece of paper or cardboard, NOT BODY PARTS, to check for leaks. Wear protective gloves and safety glasses or goggles when working with hydraulic systems. If an accident occurs, seek immediate medical attention from a physician familiar with this type of injury.

3. It is not necessary to run the PTO at the full 1000 rpm. You may run it any speed that provides sufficient seed flow and meter pressurization (page 15).

NOTICE

Equipment Damage Risk:

Do not START the pump and fan suddenly at high PTO speed. Engage the PTO clutch slowly (if possible) and/or at low engine rpm, and gradually increase PTO rpm. The hydraulic fan can be damaged by sudden acceleration.

4. • Check that tractor is in Park or Neutral.
   • Check parking brake set.
   • Set the tractor PTO controls for 1000 rpm gearing (if multi-speed) and clockwise rotation (if bidirectional).
   • Start tractor engine and set throttle to idle.
   • Engage the PTO.
   • Bring the tractor engine and PTO up to intended field rpms.
5. Check for hydraulic fluid leaks.
6. Verify fluid level in reservoir (page 14).

About the Flow Control Valve

The flow control valve adjusts the percent of PTO pump output that is supplied to the planter hydraulic motors. The total pump flow, in gpm or liters/min, is also directly proportional to PTO shaft rpm.

Adjustment may require two persons. Pump oil flow is ideally adjusted with all hydraulic motors active under simulated field workload, relying on seed monitor rpm readout, and/or Magnehelic® pressure gauges.

⚠ CAUTION

Hearing Damage Hazard:

Wear ear protection when adjusting the flow control valve. The valve is located near the fan(s). The fan(s) must be running during adjustment. The fan(s) are loud.

Flow Control Page Reference

On Great Plains Yield-Pro® 2- and 3-section planters, the PTO pump supplies between one and three hydraulic motors.The table below summarizes the motor count/use and readout resource available for the covered planters.

Planter Model[a]	PTO Kit	Seed Drive	First Motor	Second Motor	Third Motor	Fan Adjust	Valve Location	Page
YP1220	401-936A	Ground	Seed Fan	-	-	RPM	Arch Frame	18
YP1225#55	401-936A	Ground	Seed Fan	-	-	RPM	Arch Frame	18
YP1225#56	401-934A	Hydraulic	Seed Fan	Seed Drive	-	RPM	Arch Frame	21
YP1225A#55	401-937A	Ground	Seed Fan	-	-	RPM	Arch Frame	18
YP1225A#56	401-935A	Hydraulic	Seed Fan	Seed Drive	-	RPM	Arch Frame	17
YP1625#55	401-936A	Ground	Seed Fan	-	-	RPM	Arch Frame	18
YP1625#56	401-934A	Hydraulic	Seed Fan	Seed Drive	-	RPM	Arch Frame	21
YP1625A#55	401-937A	Ground	Seed/Meter Fan	-	-	RPM	Arch Frame	18
YP1625A#56	401-935A	Hydraulic	Seed/Meter Fan	Seed Drive	-	RPM	Arch Frame	17
YP1630F	401-938A	Ground	Fertilizer Fan	-	-	in. H_2O	Seed Cart	22
YP2425	401-943A	Hydraulic	Seed Fan	Seed Drive	-	RPM	Walkboard	21
YP2425A	401-944A	Hydraulic	Seed/Meter Fan	Seed Drive	-	RPM	Walkboard	17
YP2425F	411-014A	Hydraulic	Fertilizer Fan	Seed Fan	Seed Drive	RPM	Walkboard	21
YP3010HDP	401-945A	Hydraulic	Seed Fan	Seed Drive	-	RPM	Mainframe LH	21
YP3020P	401-945A	Hydraulic	Seed Fan	Seed Drive	-	RPM	Mainframe LH	21
YP3025	401-945A	Hydraulic	Seed Fan	Seed Drive	-	RPM	Mainframe LH	21
YP3025A/AR	401-946A	Hydraulic	Seed/Meter Fan	Seed Drive	-	RPM	Fan Mast	17

Planter Model[a]	PTO Kit	Seed Drive	First Motor	Second Motor	Third Motor	Fan Adjust	Valve Location	Page
YP4010HDP	401-945A	Hydraulic	Seed Fan	Seed Drive	-	RPM	Mainframe LH	21
YP4020P	401-945A	Hydraulic	Seed Fan	Seed Drive	-	RPM	Mainframe LH	21
YP4025	401-945A	Hydraulic	Seed Fan	Seed Drive	-	RPM	Mainframe LH	21
YP4025A/AR	401-946A	Hydraulic	Seed/Meter Fan	Seed Drive	-	RPM	Fan Mast	17
YP4025F	401-945A	Hydraulic	Fertilizer Fan	Seed Drive	-	RPM	Mainframe LH	21
YP4425A	401-951A	Hydraulic	Seed Fan	Seed Drive	-	RPM	Fan Mast	17
1625AHD	411-147A	Ground	Fert/Meter Fan	-	-	in. H_2O[b]	Walkboard	20
1625AHL	411-138A	Ground	Meter Fan	-	-	in. H_2O[b]	Cart Strut	19
3PYP#55	401-941A	Ground	Seed Fan	-	-	RPM	Hitch	18
3PYP#56	401-939A	Hydraulic	Seed/Meter Fan	Seed Drive	-	RPM	Hitch	21
3PYPA#55	401-942A	Ground	Seed/Meter Fan	-	-	RPM	Hitch	18
3PYPA#56	401-940A	Hydraulic	Seed/Meter Fan	Seed Drive	-	RPM	Hitch	17

a. The "#" notation indicates the Feature Code used to specify ground drive (#55) or hydraulic drive (#56) seed metering.
b. A readout of fan rpm is also available on the console for reference.

Flow Adjust: Hydraulic Drive Center-Fill IntelliAg® Air-Pro® Planters

On hydraulic drive models YP1225A#56, YP1625A#56, YP2425A, YP3025A/AR, YP4025A/AR, YP4425A and 3PYPA#56, the PTO system drives two[a] motors, plumbed in parallel:

a. The fan motor generates an airflow for seed delivery and meter pressurization. The ratio is servo vane controlled by the DICKEY-john® IntelliAg® seed monitor. The vane needs to be active for accurate flow control adjustments.

b. The seed meter shaft motor is under seed monitor control, via a proportional flow solenoid valve. When engaged at typical seed rates, operating this motor reduces flow to the fan motor. The seed motor needs to be engaged at least briefly during setup to choose a flow rate that keeps the fan at optimal speed.

Adjustment Steps:

1. Have the DICKEY-john® Planter/Drill Control User Level 2&3 manual at hand. Making changes to the GROUND SPEED SETUP configuration requires the Level 2 password.
2. Have the Operator and Seed Rate manuals at hand, so that meter setting and fan rpm targets are known for the seed to be planted.
3. Loading seed is not required. If you do load seed, set out recovery means to capture seed metered during testing, or use section clutches[b] to disable metering.
4. Turn the IntelliAg® monitor system on.
   Turn the Master switch off.
   On the console, navigate to the GROUND SPEED SETUP screen.
   Record the ground speed constant:

Source	Digital Freq.
Gspd Constant	12345 (actual value varies)

5. Set:

Source	Manual
Manual Gnd Spd	5.0 MPH (or as desired)
Implement Lift	Disabled

6. Hitch the tractor to be used, and install the PTO pump. Raise the planter. Unfold the planter.

Refer to Figure 14

7. Release the lock disc ① counter-clockwise to release the knob ②. Turn the knob fully clockwise to shut off flow to the motors.

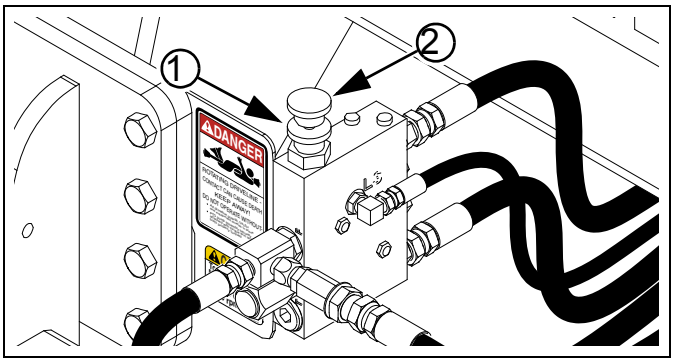

Figure 14: 34848
Flow Control Valve (3PYPA#56)

DANGER

Entanglement and Crushing Hazard:
Use extreme caution in the hitch area when the PTO is operating.

8. Start the tractor, and seed monitor. Bring the PTO up to expected field rpm (which is often not the full 1000 rpm).
9. Turn the IntelliAg® Master switch on to engage the hydraulic seed meter drive.
10. With one person observing the fan rpm readout on the seed monitor, turn the knob ② counter-clockwise until the fan is at the rpm recommended for this planter configuration, crop, population and intended field speed.

    Secure the knob at this setting with the lock disc.
11. Shut down the PTO. Set Master switch off.
12. On the console, navigate to the GROUND SPEED SETUP screen.
    Restore the original settings:

Source	Digital Freq.
Gspd Constant	12345 (actual value varies)
Implement Lift	Enabled

Monitor fan rpm when planting. If it is lower than during flow setup, perform the setup steps again, and set the valve for a higher rpm.

a. When the Yield-Pro® PTO pump system was installed, there was an option to use it only for the air system, and leave the hydraulic drive on a dedicated tractor connection. In this case, load seed, but ignore the steps to compensate for seed drive motor load.
b. If Swath Command™ section control is installed, connect the compressor at the hitch, or clutches will not disengage.

Flow Adjust: Ground Drive IntelliAg® Center-Fill Planters

On ground drive models YP1220, YP1225#55, YP1225A#55, YP1625#55, YP1625A#55, YP1630F, 3PYP#55 and 3PYPA#55, the PTO system drives one motor, the fan supplying air for seed delivery and meter pressurization. The air ratio is servo vane controlled by the seed monitor. The vane needs to be active for accurate flow control adjustments.

Adjustment Steps:

1. Hitch the tractor to be used, and install the PTO pump. Raise the planter. Unfold the planter.

Refer to Figure 15

2. Release the lock disc ① counter-clockwise to release the knob ②. Turn the knob fully clockwise to shut off flow to the motors.

DANGER

Entanglement and Crushing Hazard:
Use extreme caution in the hitch area when the PTO is operating.

3. Start the tractor, and seed monitor. Bring the PTO up to expected field rpm (which is often not the full 1000 rpm).
4. With one person observing the fan rpm readout on the seed monitor, turn the knob ② counter-clockwise until the fan is at the rpm recommended for this planter configuration, crop, population and intended field speed.

   Secure the knob at this setting with the lock disc.
5. Monitor fan rpm when planting. If it is lower than during flow setup, perform the setup steps again, and set the valve for a higher rpm.

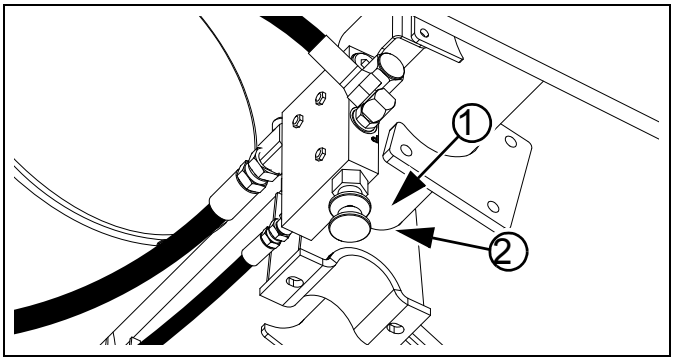

Figure 15: 36338
Flow Control Valve (YP1625#55)

Flow Adjust: Ground Drive Row-Hopper Air-Pro® (Meter-Only) Planters

On planter models 1625AHL, the PTO system drives the fan motor, which is used only for seed meter pressurization.

The seed monitor console reports, but does not control fan rpm, and the value noted during adjustment can be useful afield and during later setups.

Adjustment Steps:

Refer to Figure 16

1. Consult your planter Seed Rate manual for the intended crop, noting:
   • Range and Transmission sprockets required,
   • correct Air-Pro® seed disk (not shown),
   • initial inlet shutter setting (not shown), and
   • initial meter pressurization.
2. Install seed disks. Leave rain covers off meters.
3. Set meter inlet shutters per the Seed Rate manual.
4. Open any slide gates under hoppers.
5. Load enough seed to completely fill the meter inlet tubes, and at least partially fill every hopper.
6. Set out containers, under row unit seed tubes, to collect seed metered during setup.
7. Clear the hitch area of non-essential persons. Check essential personnel for long hair, scarves, cords, frays, loose flaps and anything else that might get entangled. Clear the area of dangling or loose wires, straps, cord and other lines that might become entangled and pull someone in.
8. Configure the meter drive system sprockets for the rate desired (see Seed Rate Manual).
9. Per your planter Operator manual, hitch the planter. Raise the planter. Install lift locks. This is to free the meter ground drive wheel.
10. • Check that tractor is in Park or Neutral.
    • Check parking brake set.
    • Set the tractor PTO controls for 1000 rpm gearing (if multi-speed) and clockwise rotation (if bidirectional).
    • Start tractor engine and set throttle to idle.
    • Engage the PTO.
    • Bring the tractor engine and PTO up to intended field rpms.
11. At the flow control valve, turn the lock disc ① counter-clockwise to release the knob ②. Slowly turn the knob counter-clockwise to start the fan. Bring the fan speed up until the Magnehelic® gauge ③ displays the suggested pressure for this crop.
12. Turn the meter ground drive wheel forward several turns, until all exposed cells in all seed disks contain seed.

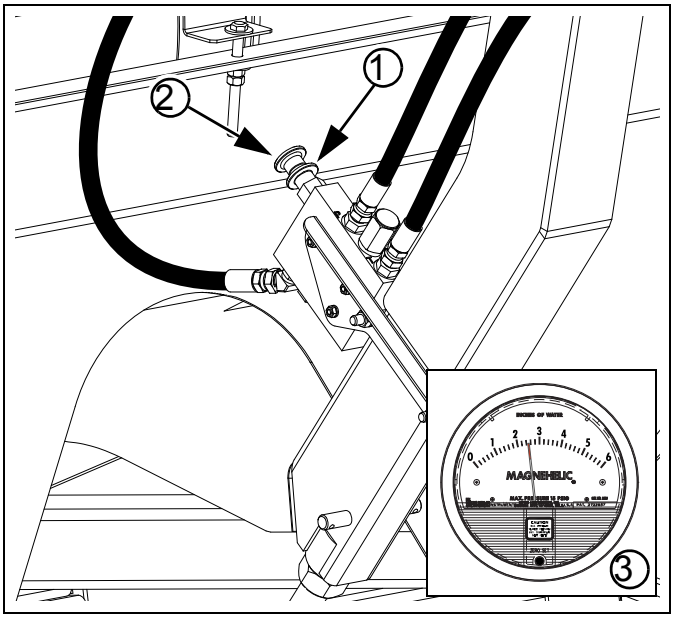

Figure 16: 36340
Flow Control Valve (1625AHL)

13. Recheck the Magnehelic® gauge. The reported pressure is likely to have increased. Adjust the flow control knob to bring the pressure reading back to the recommended value. Tighten the lock disc.
14. Shut down the PTO, and as desired, the tractor.
15. Install rain covers on seed meters.

Flow: Ground Drive Row-Hopper Air-Pro® Dry Fertilizer Planters

On model 1625AHD planters, the PTO pump drives a single fan which delivers dry fertilizer and pressurizes the seed meters. Setting and balancing pressures is a manual operation. The seed monitor reports fan rpm.

Review the air system overview, fan operation, and butterfly valve adjustment in the 411-020M Operator manual before adjusting for PTO operation.

1. Look up the recommended meter pressurization for the intended crop (see Seed Rate manual). Make a note of the previous or factory settings of all butterfly valves. Load seed in hoppers and meters. Meters must be full to inlet shutters for valid readings.

Refer to Figure 18

2. Close the manifold outlet butterfly valve ⑤ (set to 90·). If the wing butterfly valves have been previously adjusted for balance, leave them undisturbed, otherwise set them full open (0·).

3. • Check that tractor is in Park or Neutral.
   • Check parking brake set.
   • Set the tractor PTO controls for 1000 rpm gearing (if multi-speed) and clockwise rotation (if bidirectional).
   • Start tractor engine and set throttle to idle.
   • Engage the PTO.
   • Bring the tractor engine and PTO up to intended field rpms.

DANGER

Entanglement and Crushing Hazard:
Use extreme caution in the hitch area when the PTO is operating.

Refer to Figure 17

4. At the flow control valve, turn the lock disc ① counter-clockwise to release the knob ②. Slowly turn the knob counter-clockwise to start the fan. Bring the fan speed up until the Air-Pro® gauge ④ displays the suggested pressure for this crop. Secure the lock disc.

5. Raise the planter. Turn each meter ground drive wheel (2 or 3 per planter) forward several turns, until all exposed cells in all seed disks contain seed.

6. As necessary, readjust manifold outlet butterfly valve ⑤ to achieve recommended pressure on the Air-Pro® gauge ④.

7. Re-check both pressures in the field, with material flowing at desired rates. Adjust fan speed to stay within 35 to 45 inches on the fan manifold gauge ③. Adjust the manifold outlet butterfly valve ⑤ to the suggested pressure for the seed.

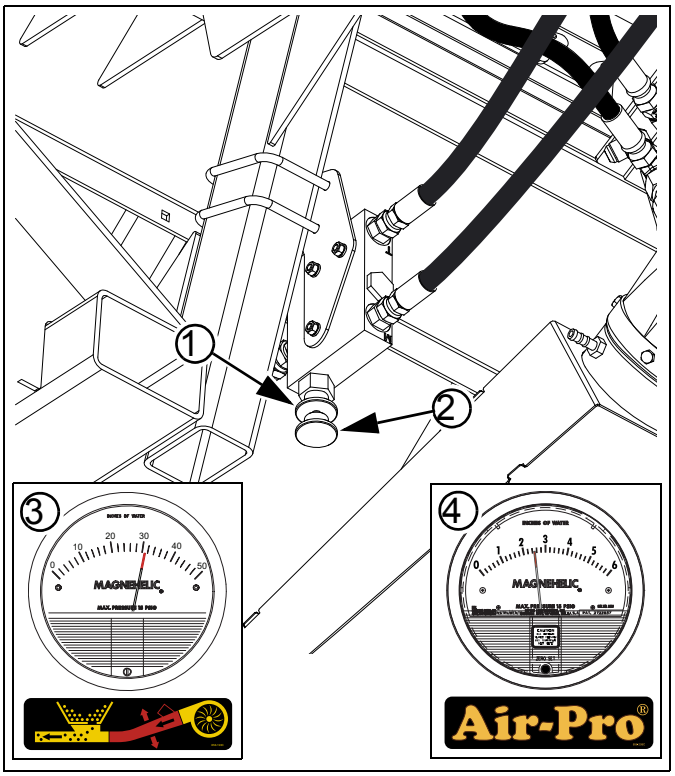

Figure 17:
Flow Control Valve (1625AHL)

36339
29842

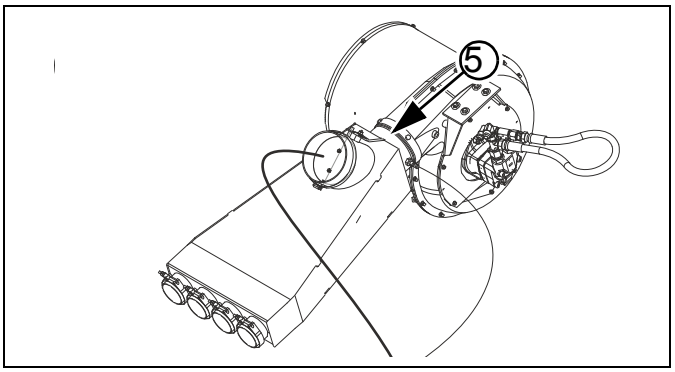

Figure 18
Fertilizer Manifold Butterfly Valve

36134
858-208C

Flow Adjust: Hydraulic Drive IntelliAg® Singulator Plus™ & Finger Pick-Up Planters

On hydraulic drive models YP1225#56, YP1625#56, YP2425, YP2425F, YP3010HDP, YP3020P, YP3025, YP4010HDP, YP4020P, YP4025, YP4025F and 3PYP#56, the PTO system drives two[a] or three motors, plumbed in parallel:

a. One fan motor (two on model YP2425F) generates an airflow for seed delivery and/or fertilizer delivery (models YP2425F, YP4025F).

b. The other motor, for seed meter operation, is under seed monitor control, via a proportional flow solenoid valve.

When engaged at typical field seed rates, the seed drive motor reduces flow to the delivery fan. The seed motor needs to be engaged at least briefly during setup to choose a flow rate that keeps the delivery fan at optimal speed.

Adjustment Steps:

1. Have the DICKEY-john® Planter/Drill Control User Level 2&3 manual at hand. Making changes to the GROUND SPEED SETUP configuration requires the Level 2 password.
2. Have the Operator and Seed Rate manuals at hand, so that the fan rpm target is known for the seed to be planted.
3. Loading seed is not required. Loading fertilizer is not recommended. If you do load seed, set out recovery means to capture seed metered during testing, or use section clutches[b] to disable metering.
4. Turn the IntelliAg® monitor system on.
   Turn the Master switch off.
   On the console, navigate to the GROUND SPEED SETUP screen.
   Record the ground speed constant:

Source	Digital Freq.
Gspd Constant	12345 (actual value varies)

5. Set:

Source	Manual
Manual Gnd Spd	5.0 MPH (or as desired)
Implement Lift	Disabled

6. Hitch the tractor to be used, and install the PTO pump. Raise the planter. Unfold the planter.

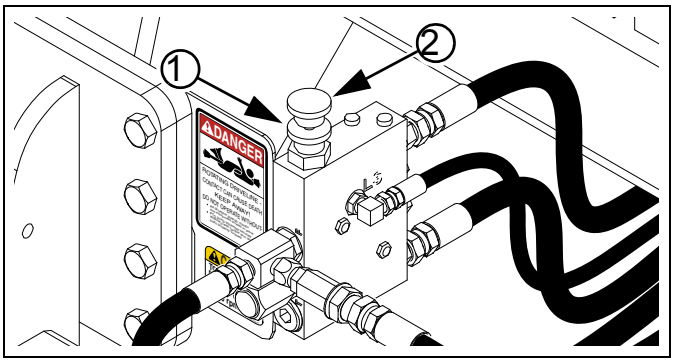

Figure 19: 34848
Flow Control Valve (3PYP#56)

Refer to Figure 19

7. Release the lock disc ① counter-clockwise to release the knob ②. Turn the knob fully clockwise to shut off flow to the motors.

DANGER

Entanglement and Crushing Hazard:
Use extreme caution in the hitch area when the PTO is operating.

8. Start the tractor, and seed monitor. Bring the PTO up to expected field rpm (which is often not the full 1000 rpm).
9. Turn the IntelliAg® Master switch on to engage the hydraulic seed meter drive.
10. With one person observing the fan rpm readout on the seed monitor, turn the knob ② counter-clockwise until the fan is at the rpm recommended for this planter configuration, crop, population and intended field speed.

    Secure the knob at this setting with the lock disc.
11. Shut down the PTO. Set Master switch off.
12. On the console, navigate to the GROUND SPEED SETUP screen.
    Restore the original settings:

Source	Digital Freq.
Gspd Constant	12345 (actual value varies)
Implement Lift	Enabled

Monitor fan rpm when planting. If it is lower than during flow setup, perform the setup steps again, and set the valve for a higher rpm.

a. If the Yield-Pro® PTO pump system was ordered for ground drive, the hydraulic drive is still on a dedicated circuit. In this case, load seed, but ignore the steps to compensate for seed drive motor load.
b. If Swath Command™ section control is installed, connect the compressor at the hitch, or clutches will not disengage.

Flow: Ground Drive Row Hopper Finger Pick-Up & Brush Meter Planters

On models YP1630F, the PTO system drives one motor, for the fertilizer delivery fan.

Adjustment Steps:

1. Have the Operator and Seed Rate manuals at hand, so that the fan rpm target is known for the material to be applied and the rate range.

📖 Loading material is not required. The fertilizer meter does not operate during this setup.

2. Hitch the tractor to be used, and install the PTO pump. Raise the planter.

Refer to Figure 20

3. Release the lock disc ① counter-clockwise to release the knob ②. Turn the knob fully clockwise to shut off flow to the motors.

⚠ DANGER

Entanglement and Crushing Hazard:

Use extreme caution in the hitch area when the PTO is operating.

4. Start the tractor, and seed monitor. Bring the PTO up to expected field rpm (which is often not the full 1000 rpm).
5. With one person observing the Magnehelic® gauge, turn the knob ② counter-clockwise until the fan is at the recommended pressure for this planter configuration, fertilizer and application rate.

   Secure the knob at this setting with the lock disc.
6. Shut down the PTO.

Monitor pressure when planting. If it is lower than during flow setup, perform the setup steps again, and set the valve for a higher pressure.

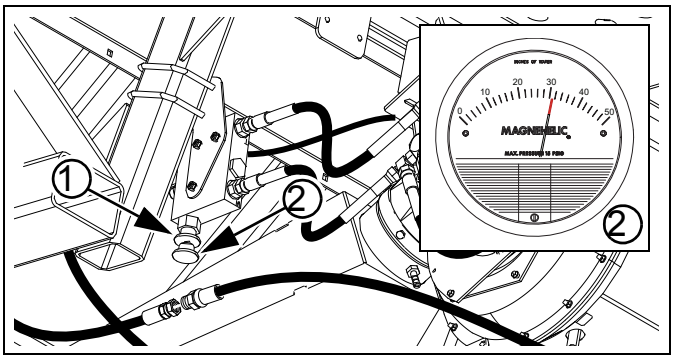

Figure 20: Flow Control Valve (YP1630F) and Magnehelic® Gauge 34849 31187

PTO Unhitching

The pump may be dismounted before or after unhitching the planter and tractor. With a 3-point planter or 3-point hitch, dismounting the pump last may be easier, which is the order shown on this page. For safety, have the tractor completely shut down during PTO dismounting.

1. At the tractor, shut down the PTO.

📖 The PTO may be shut down suddenly or gradually. The fan circuit includes a bypass to recirculate excess pressure during deceleration. The fan is only sensitive to sudden acceleration.

2. Do not approach the hitch area until the PTO shaft, and the fan, have slowed to a complete stop.
3. Mechanically unhitch the planter per the Operator manual. Leave the PTO pump mounted at this time.
4. Pull the tractor forward enough to allow access to the PTO pump. Put the tractor in Park or Neutral. Engage the parking brake. Shut the tractor down. Take the key with you.
5. Remove the hair pin ① and the clevis pin ②. Separate the pump mounting assembly and install the clevis pin and hair pin as shown. Leave the mounting base ③ attached to the tractor.
6. Loosen and remove the large socket head cap screws ④ at the PTO coupler ⑤.
7. Slide the PTO pump ⑥ off the PTO shaft ⑦.

   If, after removing the cap screws, the coupler is still grasping the PTO shaft too tightly to remove, use the drive-out holes ⑧ to pry the clamping halves apart. Insert the cap screws in the forward drive-out holes. Tighten them alternately until the coupler is free. Install the large socket head cap screws in the coupler.

NOTICE

Do not store the PTO pump on the ground.

Entanglement Hazard:
Remain clear of a rotating PTO shaft. Even when coasting to a stop, a PTO shaft can have enough residual torque to inflict serious or fatal injury.

⚠ CAUTION

Hot Surface Hazard:
Remain clear of the pump reservoir during unhitching. The oil may be hot enough to inflict a painful burn.

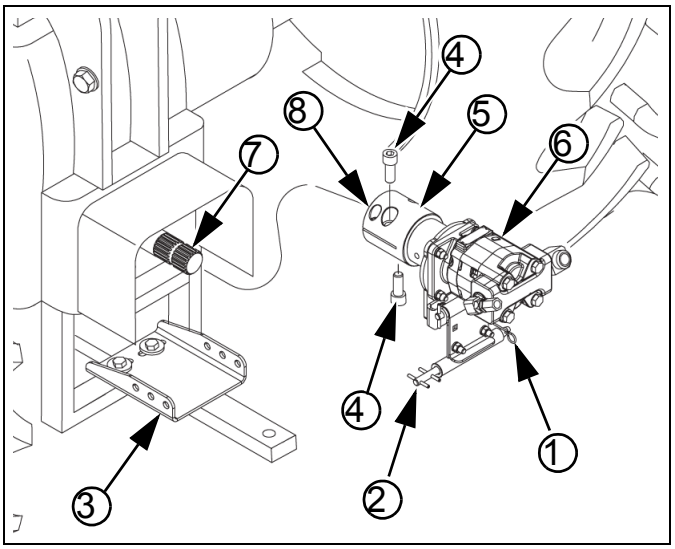

Figure 21: 68107
Dismount PTO Pump

PTO Troubleshooting

Symptom	Cause	Remedy
Air-Pro® seed meter pressure too low	Flow control adjusted too low	Increase flow control (page 15).
	Fan butterfly valve closed or set at too high an angle	Adjust angle (see Operator manual).
	PTO rpm too low	Bring up PTO rpm, but do not exceed 1000 rpm.
	Fan running in reverse (multiple possible causes)	See "**Fan running in reverse**" below.
	Pump cavitating	Check oil level (page 14).
	No blank disks in unused seed meters	Install blank disks to balance pressure.
	Seed inlet shutters open too wide	Verify setting vs., rate charts. Adjust as need for actual seed pool.
	Oil filter clogged	Replace oil filter and oil (page 25).
	Magnehelic® gauge disconnected or sample line(s) leaking	Check air gauging system.
	Magnehelic® gauge uncalibrated	Re-zero (see Operator manual).
	Flow control valve failure or malfunction	Repair or replace valve.
	Fan seals damaged	Repair or replace fan motor.
	PTO rotation and fan or valve hoses reversed (highly unlikely)	Set tractor controls for clockwise PTO. Reconnect hoses.
	Fan cooler plugged	Clean or replace fan cooler.
Pressure correct on Magnehelic®, but skips or doubles	Pressure gauge disconnected or sample line(s) leaking.	Check air gauging system.
	Magnehelic® gauge uncalibrated.	Re-zero (see Operator manual).
	Seed variety may require adjustment.	Check all other possible pressure errors, then fine tune pressure for one seed per disk cell.
Oil overheating	Oil filter clogged	Replace oil filter and oil (page 25).
	PTO rpm too high	Adjust system for ideal pressure at lower PTO rpm.
	Fan butterfly valve angle too high	Reduce to 30· (see planter Operator manual).
Fan running in reverse	PTO shaft turning counter-clockwise	Set tractor controls for clockwise PTO.
	Hoses reversed	Check hose routing from pump to valve, to reservoir and fan per Parts manual.
Fan doesn't run at all	Low oil level in reservoir	Top off reservoir. Check system for leaks.
	Flow control valve closed	Adjust valve (page 15).
	Hoses not connected correctly	Review installation (page 51).

PTO Maintenance

Oil and Filter Change

Oil Fill

Refer to Figure 22 and Figure 23

A dry or fully drained system may require as much as 20 gallons (76 liters) of oil to charge the cooler, pump, motor(s), hoses, filter and valve, and leave 13.5 gallons (51 liters) in the reservoir.

Before adding oil, check that the drain plug ① is secure, and that there are no signs of leaks in hoses or at any system fittings.

Oil Specification

10W-30 good quality mineral base hydraulic fluid, viscosity 70 to 250 SUS at 210·F (100·C)

Remove the filler cap ②. Add oil until the oil level in the reservoir, as observed on the sight gauge ③, reaches the fill line on the decal (the top edge of the horizontal mid-border of the decal). The fill line is 10.73 inches (27.3 cm) above the reservoir bottom. If the 858-029C decal requires replacement, adjust the center border line to this height.

Operate the PTO system briefly, or until the reservoir level stops changing. See "**PTO Operation**" on page 8 for operations.

Recheck the sight gauge. As necessary, add oil to fill line.

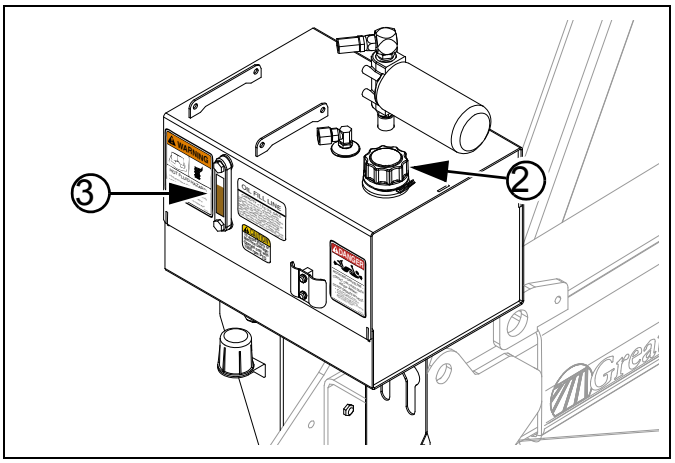

Figure 22: 34843
Oil Filler Cap and Filter

Oil and Filter Change

At a regularly scheduled oil change, also change the filter. At initial system flush, no filter change is required.

Refer to Figure 23 and Figure 22

1. Wait for the oil to cool before changing the oil.
2. Place a container with at least a 20 gallon (76 liter) capacity under the drain plug ① of the reservoir.
3. Carefully remove the drain plug.
4. Allow several minutes for oil in the filter to drain into and out of the reservoir. Change filter as required. See page 26 for filter size. Seat filter per instructions on filter.
5. Thread the plug back into the reservoir. Seating torque is 27 to 43 foot-pounds (37 to 58 N-m).

⚠ WARNING

Hot Surface and Hot Fluid Hazards:
Assess the reservoir temperature before adjusting oil level. Draining excess hot oil could result in a severe burn. If the PTO has been operated recently, the oil temperature could be as high as 180·F (82·C).

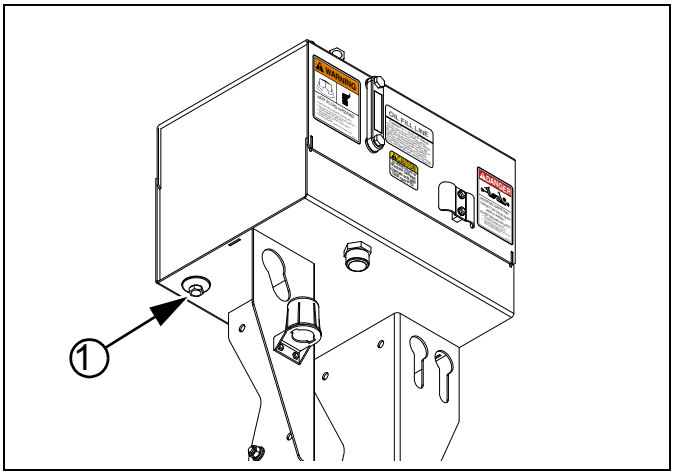

Figure 23: 34850
Oil Drain Plug

Lubrication and Scheduled Maintenance

Multi-purpose spray lubricant | Multi-pupose grease lubricant | Multi-purpose oil lubricant | Inspection | 50 Intervals (operating hours) at which service is required

Oil Filter

25 / 150 Hrs

1 filter per planter

Type: Great Plains 891-385C
Fleetguard HF6611
Zinga HE-10L

Change filter after first 25 hours, and then every 2 years or 150 hours.

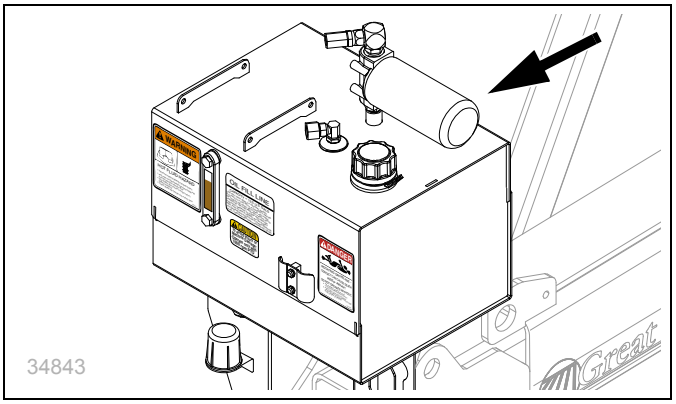

Pump/Fan Oil

3 or 4 Years

1 reservoir per planter

Type: 10W-30 Mineral-Based Oil
70 to 250 SUS at 210·F (100·C)

Quantity: 13.5 U.S. gallons (51 liters)

Change filter when changing oil, except at initial system flush.

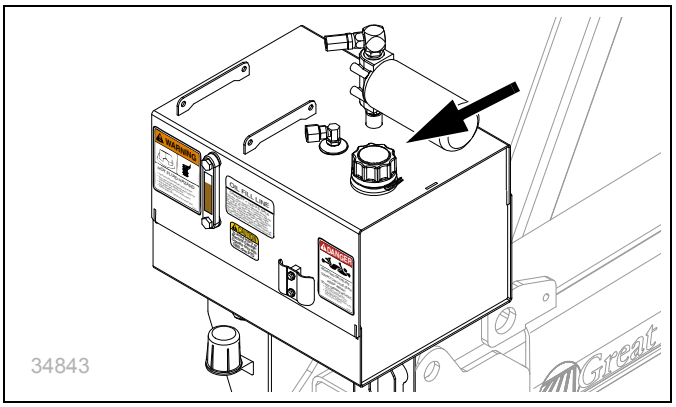

Seal Kit

As Needed

1 kit per planter, includes snap ring and all seals

Type: 810-901C for Parker 350C pumps
810-902C for Parker 365C pumps

Consult the
Service Manual
PGP/PGM315, 330, 350, 365
HY09-SM300/US,
available from Parker Hannifin Corporation:
www.parker.com

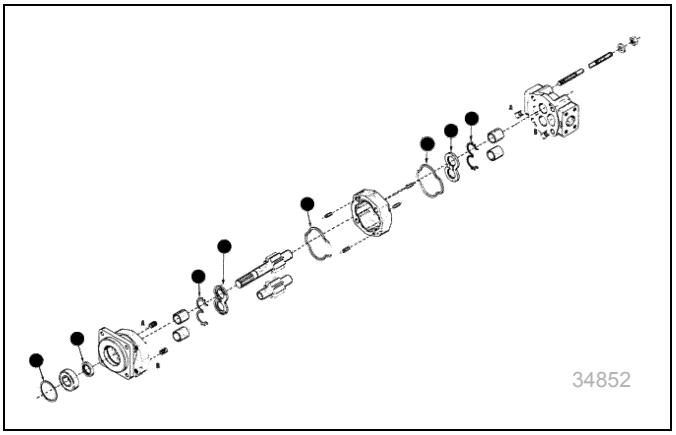

Appendix A - Installation

Before You Start

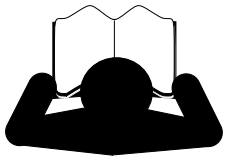

Most accidents are the result of negligence and carelessness, usually caused by failure of the installer to follow simple but necessary safety precautions. Allow no one to install the Yield-Pro® PTO pump before carefully reading this manual.

Fasteners may be loosely assembled. Remove them before mounting the component. Due to evolving manufacturing practices, sub-assemblies may already be completely pre-assembled. If so, check that fasteners are tight, and skip the unneeded assembly steps.

Tools Required

- a lift or hoist with a 100 pound \ 45 kg capacity[a]
- basic hand tools
- 10 to 15 gallons (38 to 57 liters) of good quality 10-W30 mineral base hydraulic fluid, viscosity from 70-250 SUS range at 210·F (100·C).
- bucket for collecting oil
- hose marker, such as white electrical tape and indelible marker
- power equipment with a Type 2 or 3 PTO for flushing and charging the system
- the planter Operator and Parts manuals
- protective footwear if the planter already has coulters or row cleaners installed
- 14.9 mm ($^{9}/_{16}$ or 0.56 inch) drill bit, suitable pilot bit, and portable drill with 15 mm ($^{5}/_{8}$ inch) or larger chuck.

Torque values for fasteners are shown on page 87.

Call-Outs

① to ⑨ and ⓐ to ⓩ	Single-character callouts identify components in the currently referenced Figure or Figures. Numbers and letters may be reused for different items on other pages.
[11] to [69]	Two-digit callouts in the range 11 to 69 reference existing parts removed and reused. They are listed on page 92.
[101] to [307]	Three-digit callouts in the range 101 to 307 reference new parts. The descriptions match those on the parts, cartons, bags or item tags, as well as descriptions your updated Parts Manual.

a. For a pull-type planter, a jack or hoist with a 1000 pound (453 kg) capacity may be needed, depending on the outcome of the inspection at adapter on page 31.

Compatible Planters

1. Check the kit part number, and planter serial number plate before beginning installation. The kits may not be compatible with all older planters.

Yield-Pro® 2- or 3-Section Planter		Seed Drive	PTO Pump Kit																
Model	Oldest		401-934A	401-935A	401-936A	401-937A	401-938A	401-939A	401-940A	401-941A	401-942A	401-943A	401-944A	401-945A	401-946A	401-951A	411-014A	411-138A	411-147A
YP1220		Ground Drive			4														
YP1225#55		Ground Drive			4														
YP1225#56	s/n A1111K+[a]	Hydraulic Drive	4		4[b]														
YP1225A#55		Ground Drive				4													
YP1225A#56		Hydraulic Drive		4		4[b]													
YP1625#55	year 2005+[a]	Ground Drive			4														
YP1625#56	s/n A1190B+[a]	Hydraulic Drive	4		4[b]														
YP1625A#55		Ground Drive				4													
YP1625A#56		Hydraulic Drive		4		4[b]													
YP1630F		Ground Drive					4												
YP2425		Hydraulic Drive										4							
YP2425A		Hydraulic Drive											4						
YP2425F		Hydraulic Drive										4							
YP3010HDP		Hydraulic Drive											4						
YP3025		Hydraulic Drive												4					
YP3025A/AR		Hydraulic Drive													4				
YP4010HDP		Hydraulic Drive												4					
YP4025		Hydraulic Drive												4					
YP4025A/AR		Hydraulic Drive													4				
YP4025F		Hydraulic Drive															4		4
YP4425A		Hydraulic Drive														4		4	
1625AHD		Ground Drive																	4
1625AHL		Ground Drive																4	
3PYP#55	s/n 1056S+[c]	Ground Drive								4									
3PYP#56	s/n 1056S+[c]	Hydraulic Drive						4		4[b]									
3PYPA#55	s/n 1056S+[c]	Ground Drive									4								
3PYPA#56	s/n 1056S+[c]	Hydraulic Drive							4		4[b]								

a. For hydraulic drive models, check the serial number plate. For ground drive models, note whether the seed monitor is a DICKEY-john® IntelliAg® (supported) or Seed Manager SE (unsupported). Models with lower serial numbers or manufactured prior to 2005 may not be mechanically compatible with these kits, may have a fan with no case drain, and/or have a hydraulic drive controller and/or seed monitor for which flow rate setup instructions are not provided in this manual.

b. On Hydraulic Drive planters, use the Ground Drive kit if you desire to leave the hydraulic drive on a dedicated circuit.

c. 3PYP and 3PYPA models must also have hydraulic steering.

Models Not Listed

Single-section models 2025A, 2525A, YP425A, YP425A3P, YP625A, YP625A3P, YP825A, YP825A3P and YP825AR have separate 6-spline PTO kits, which are covered in manual 401-885M.

For any other Air-Pro® or Yield-Pro® planter, have your Great Plains dealer contact the factory for current information.

Pre-Delivery and Other Options

If you are installing the Yield-Pro® PTO Pump on a newly-shipped planter, it may be more convenient to install the PTO pump system during the dealer pre-delivery setup:

- Install the PTO pump system *before* mounting a seed hopper or PROBOX® (or remove any seed container present). This improves working space around the fan.

  Exception: on models YP1630F, YP2425F and YP4025F, install the seed structures first.
- Install the PTO pump system *before* installing or completing installation of markers. This eliminates an overhead sharp object hazard, and improves working space at the fan(s).
- Install the PTO pump system *after* installing an optional hydraulic tongue.

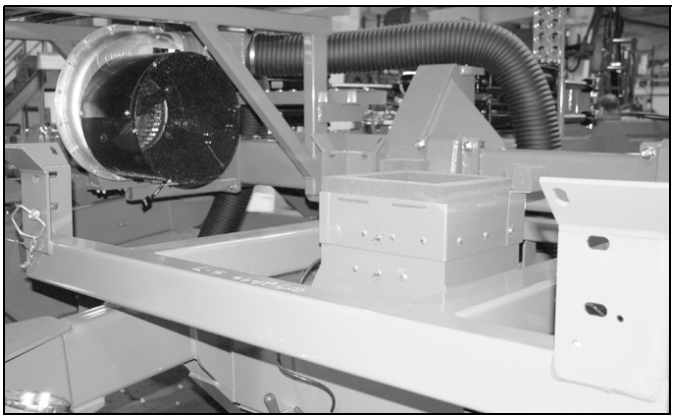

Figure 24: 26045
YP2425: No Seed Hopper

Prepare Planter

2. Read and understand "**Important Safety Information**" starting on page 1.
3. Position the planter on a level surface in a well lighted location suitable for the installation, which includes room to unfold, and possibly room (and vertical clearance) to unfold markers. A clear surface beneath makes it easier to recover any dropped parts.
4. Examine the working space around fans. If space is tight, consider two steps to improve it:
   a. dismount a removable seed hopper/PROBOX®
   b. unfold markers
5. Lower the unfolded planter, or install lift locks if left raised.
6. Chock the tires if the surface is not completely level.
7. Unhitch the planter.

Prepare Hitch

Disconnect Hose Fittings at Hitch

The existing fan hoses may be used to connect the new PTO pump to hydraulic motors on the planter. The hitch-end fittings are modified for this purpose.

Any other hydraulic motor circuits at the hitch, such as hydraulic drive, are not re-used, and are left as-is at the hitch end. They are capped at the rear ends.

Refer to Figure 25

Three fan hoses (supply, return and case drain) run from the fan to the hitch. All fittings forward of the crimped-on MORBs ① are removed. These hoses are later re-connected to the pump or reservoir supplied with the PTO kit.

Newer planters have a polymer hose handle ② on the fan supply QD at the hitch. They may also have a handle on the return line. Older planters do not have hose handles.

8. Set out an oil collection bucket near the hitch ends of the hoses.
9. Remove any hose handle housings ②.
10. Disconnect the hoses from the hitch fittings at the MORB connectors ① crimped on the hoses. Drain the removed fittings and hose ends using the bucket. Set the open hose ends in the bucket.

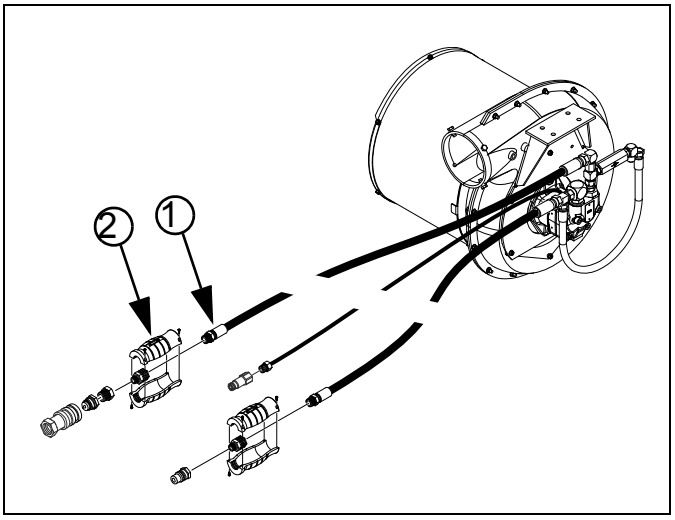

Figure 25: 36000
3-Port Fan Hoses

Dismount Air Compressor(s)

For models 3PYP and 3PYPA, continue at "**Prepare Fan(s)**" on page 32.

For pull-type planters having no compressors, continue at "**Prepare Fan(s)**" on page 32.

Refer to Figure 26 and Figure 27

Any air compressors at the tongue of a pull-type are presently installed on their own pedestals ①, which interfere with a PTO reservoir installation. The pedestals are removed, and the compressors relocated to mounts on the reservoir.

The needed reservoir mounts are separately purchased. See page 6 for ordering information.

11. Remove protective housings at each compressor. Save all parts and fasteners.
12. Locate a suitable disconnection point for each air and electrical line near each compressor.
13. Label each tractor-side or implement-side hose or lead as to which compressor it serves.

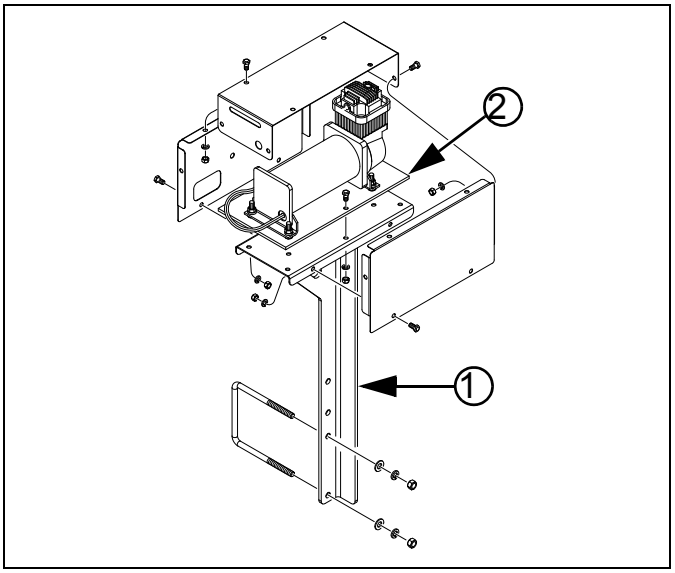

Figure 26: 34090
Row-Pro™ Compressor

14. Disconnect the lines. Tape the air hoses or tie them off to prevent ground contact or contamination.
15. Dismount each compressor assembly by removing the fasteners that connect the base ② to the pedestal platform. Save the assembly and all fasteners.
16. At each lower U-bolt, dismount the pedestal from the tongue. The pedestal, U-bolt, U-bolt washers and U-bolt nuts are not re-used.

Each compressor is re-installed on a new mount at a later step.

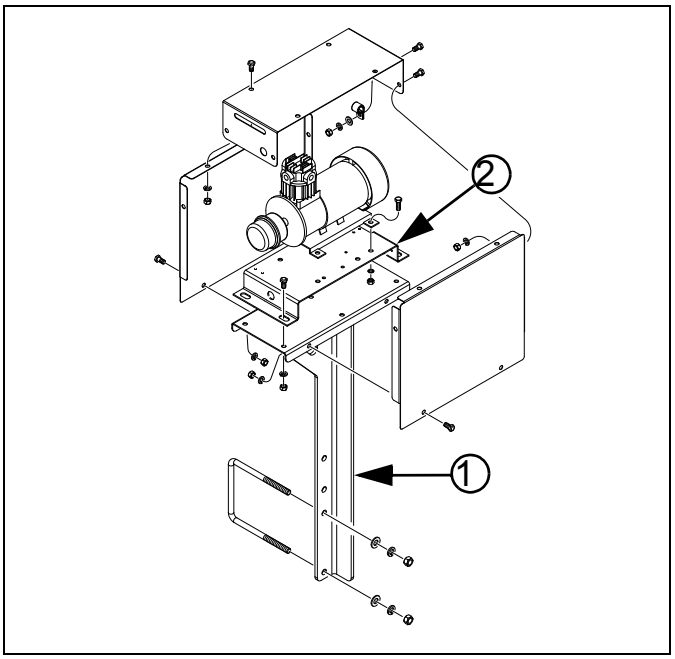

Figure 27: 34090
Swath Command™ Compressor

Verify Reservoir Mount Holes

For models 3PYP and 3PYPA, continue at "**Prepare Fan(s)**" on page 32.

Planters manufactured in 2012 and earlier need to have PTO oil reservoir mount holes added to the hitch side plates.

Refer to Figure 28, Figure 29 or Figure 30, showing left hand plates - the RH side is mirror image

17. Inspect both hitch side plates for two sets of 14.9 mm ($^{9}/_{16}$ inch) through-holes above and to the rear of the hitch height adjustment holes.

    If the holes are present, continue at "**Prepare Fan(s)**" on page 32.

Drill Mount Holes

18. Mark hole locations on each side of the hitch. The lateral location is relative to the vertical center-line of the hitch adjustment holes. The vertical location is relative to a horizontal edge that varies by tongue style.
19. Drill pilot holes, then finish holes.

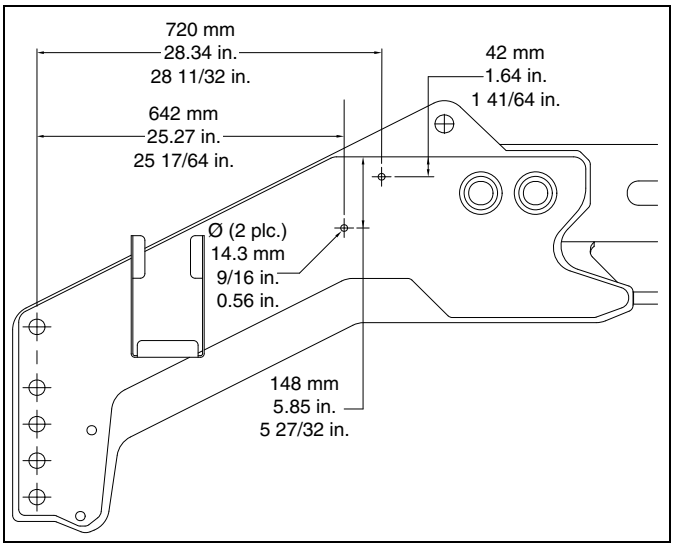

Figure 28: PTO Mount Holes: YP4425A 36323

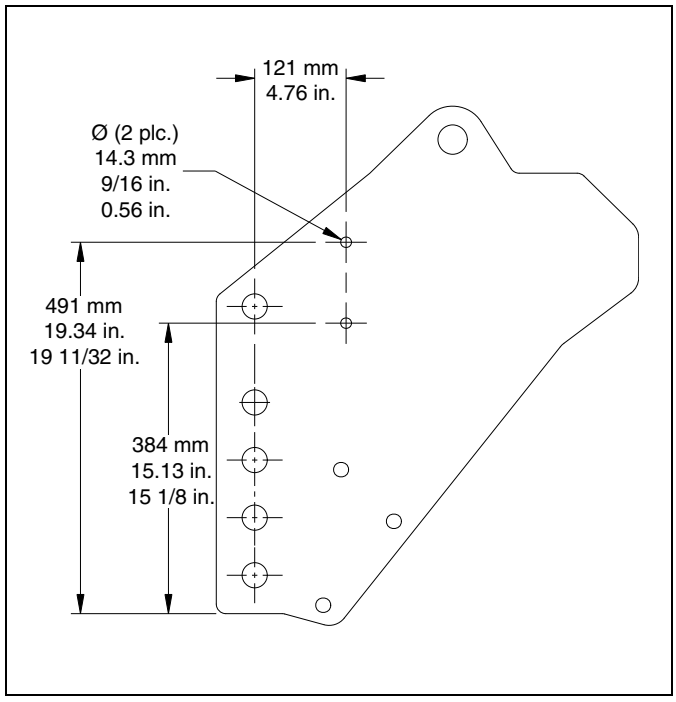

Figure 29: PTO Mount Holes: YP12 and YP16 36321

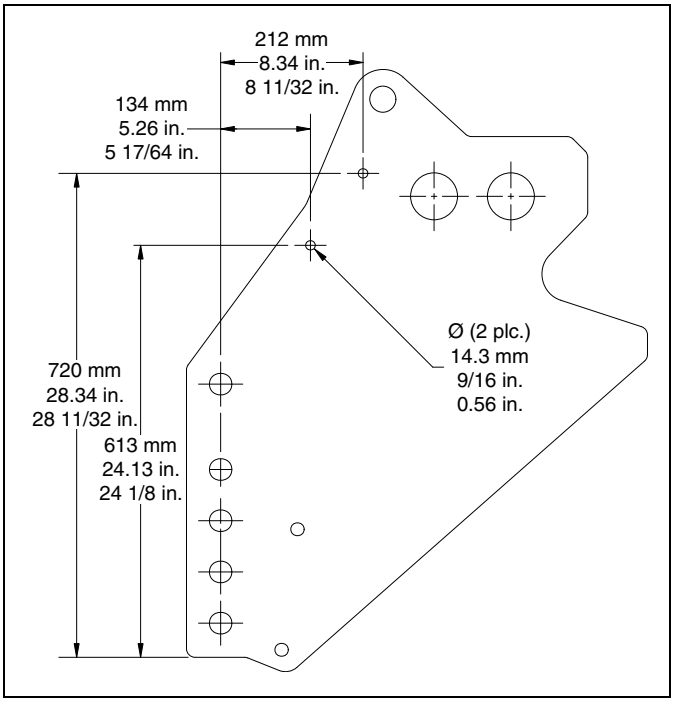

Figure 30: PTO Mount Holes: YP2425/A/F, YP30, and YP40 36322

Prepare Fan(s)

📖 Kit 411-014A for model YP2425F includes two fan coolers. Perform the cooler installation for each fan.

Open Fan Screen

Refer to Figure 31 (fan exit port orientation varies by planter model and fan location/function)

20. Remove and save the sheet metal screws ① securing the cap ② to the screen ③.
21. Remove and save the screen cap ②.

Identify Fan Type

Cooler installation steps are different for 6-inch and 8-inch fans.

Refer to Figure 32

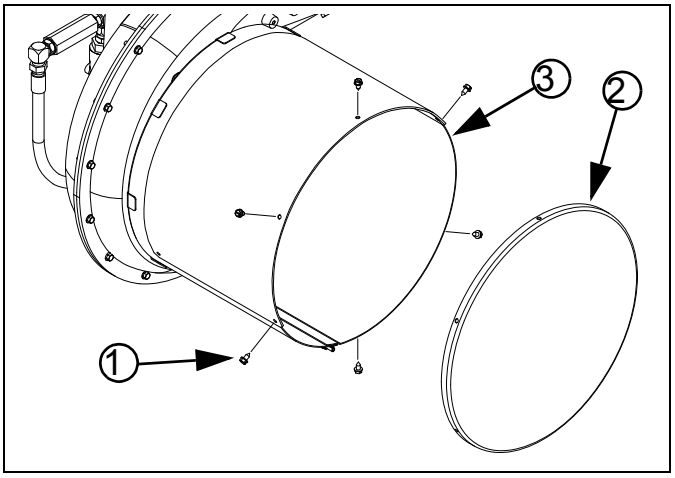

Figure 31: Open Fan Screen 36003

6-Inch Fan

6-inch fans have 6 screws securing the cage (and any sensor bracket) to the fan housing. 6-inch fans take cooler bundles:

(107) 401-143L 6IN HYD FAN COOLER 7/8MJIC or
(108) 401-833L 6IN HYD FAN COOLER ASSY

For a 6-inch fan, continue at "**6in: Relocate Sensor Bracket**" on page 33.

8-Inch Fan

8-inch fans have 4 screws securing the cage (and any sensor bracket) to the fan housing. 8-inch fans take cooler bundles:

(110) 401-924L 8IN FAN COOLER ASSY 3/4MJIC or
(111) 401-926L 8IN FAN COOLER ASSY 7/8MJIC

For an 8-inch fan, continue at "**Install 8-Inch Fan Cooler**" on page 38.

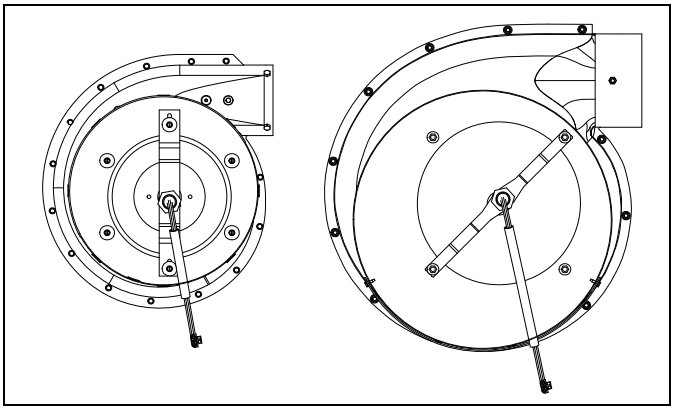

Figure 32:
6- and 8-Inch fans
36378

Cooler Installation Page Reference

Kit	Description	Fan	Page
401-934A	YP12,16 HYD DRV PTO KIT	6 in.	33
401-936A	YP12,16 GRND DRV PTO KIT	6 in.	33
401-938A	YP16F PTO KIT	6 in.	33
401-939A	3PYP HYD DRV PTO KIT	6 in.	33
401-941A	3PYP GRND DRV PTO KIT	6 in.	33
401-943A	YP24 PTO KIT	6 in.	33
401-945A	YP30,40 PTO KIT	6 in.	33
411-014A	YP24F PTO HYDRAULIC PUMP KIT	6 in.	33
411-138A	YP16AHL PTO KIT	6 in.	33

Kit	Description	Fan	Page
411-147A	YP16AHD PTO KIT	6 in.	33
401-935A	YP12A,16A HYD DRV PTO KIT	8 in.	38
401-937A	YP12A,16A GRND DRV PTO KIT	8 in.	38
401-940A	3PYPA HYD DRV PTO KIT	8 in.	38
401-942A	3PYPA GRND DRV PTO KIT	8 in.	38
401-944A	YP24A PTO KIT	8 in.	38
401-946A	YP30A,40A PTO KIT	8 in.	38
401-951A	YP44A PTO KIT	8 in.	38

6in: Relocate Sensor Bracket

This page applies only to 6-inch/6-cage-screw fans. For 8-inch fans, continue page 38.

Refer to Figure 33 (top and bottom are relative to Up and Down, and not to the fan exit port, often not at top)

22. Inspect the fan cage for presence of a:
    (17) 401-537D DJ FAN SENSOR MOUNT BRKT
    The bracket may or may not have a sensor installed.

    If there is no sensor bracket, skip to step 25.

    If the bracket is installed in the top and bottom holes ⓐ, skip to step 25.

    If the bracket is not in the top-most and bottom-most holes, it must be relocated.

Refer to Figure 34 (top and bottom are relative to Up and Down, and not to the fan exit port, often not at top)

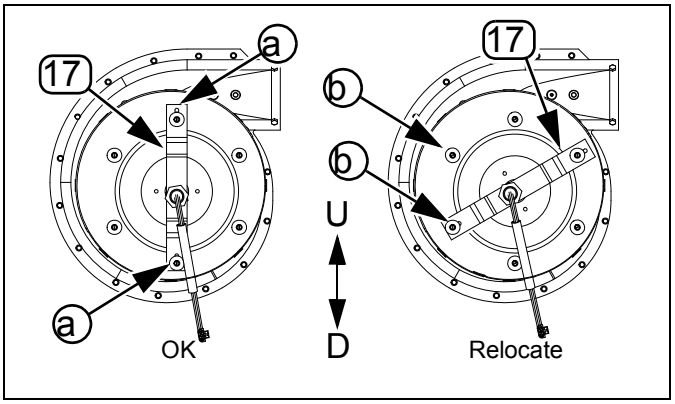

Figure 33:
Inspect Sensor Bracket
36004

23. This step presumes that there is a sensor bracket ⑰, and it is mounted in one of the lateral holes sets ⓑ. Remove and save two sets of fasteners ④ securing the bracket, and two sets of fasteners ④ at the top and bottom holes ⓐ, four sets total.

    🕮 Leave the final set of lateral fasteners ⑤ in place, so that the fan cage does not need to be re-mounted.

24. Relocate the sensor bracket ⑰ to a vertical orientation, using hole set ⓐ. Secure it with two sets of saved fasteners.

25. Remove and save the four or remaining two sets of fasteners at lateral holes ⑤. These holes are used for mounting the cooler in the following steps.

26. Repeat step 20 through step 25 for all hydraulic fans on the planter.

Continue at "**6in: Install Fan Cooler(s)**" on page 34

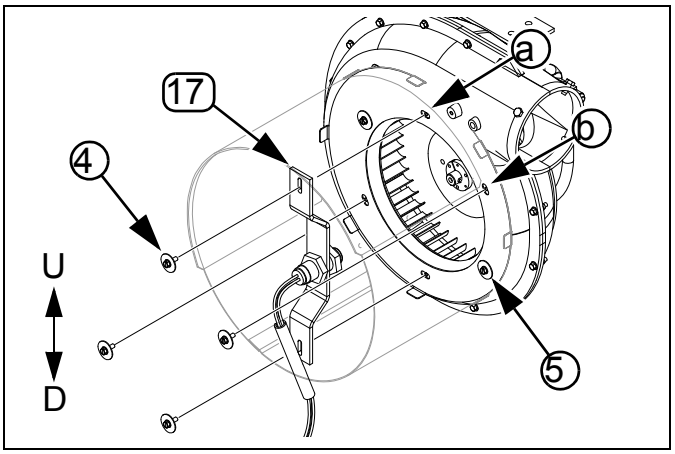

Figure 34: 36005
Relocate Sensor Bracket

6in: Install Fan Cooler(s)

This page applies only to 6-inch/6-cage-screw fans. For 8-inch fans, continue page 38.

Refer to Figure 35

In normal use, the hydraulic fan circuit requires enough power that, absent a tractor oil radiator or local cooler, the oil would overheat. The Yield-Pro® PTO pump kit includes one or more cooler (radiator) assemblies (107 or 108) that install inside the fan cage(s).

🕮 Do not disconnect the fan motor hoses during cooler installation. Those hoses are reconnected during "**Select one new:** `411-145L YP16AHL PTO FLOW CONTROL` **one new:** `806-067C U-BOLT 1/2-13 X 6 1/32 X 4 1/4` **and two sets new:** `804-015C WASHER LOCK SPRING 1/2 PLT 803-020C NUT HEX 1/2-13 PLT` **With the valve assembly knob up and to the rear, position the mount bracket on the right side of the strut at the top of the lower tube. Secure with U-bolt , lock washers and nuts .Install Hoses**" on page 51.

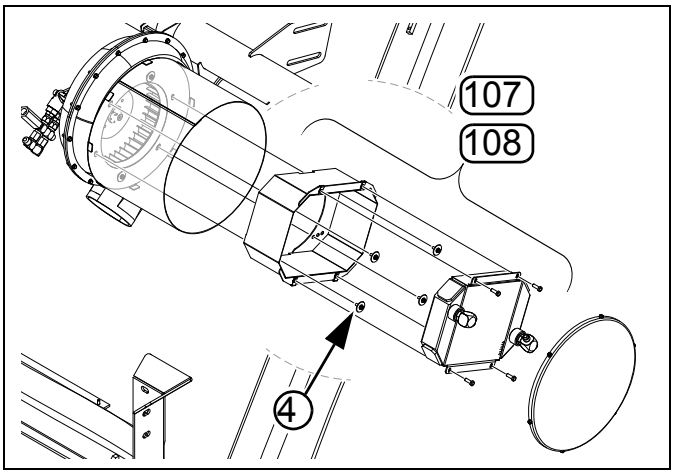

Figure 35: 36376
6 in. Fan Cooler Arrangement

6in: Install Cooler

6-Inch Fan: Break Down Cooler Assembly

Refer to Figure 36

The cooler assembly (107 or 108) must be partially disassembled to have access to the shroud mounting holes.

27. Select one new of:
    107 401-143L 6IN HYD FAN COOLER 7/8MJIC
    108 401-833L 6IN HYD FAN COOLER ASSY
    Remove and save four:
    184 802-159C HHCS 5/16-18X1 GR5
    Leave the nut clips 175 on the shroud (109 or 119). Separate the shroud 109 and cooler 204:
    109 401-834H 6 IN HYD FAN SHROUD
    204 810-804C C12 HYD OIL COOLER

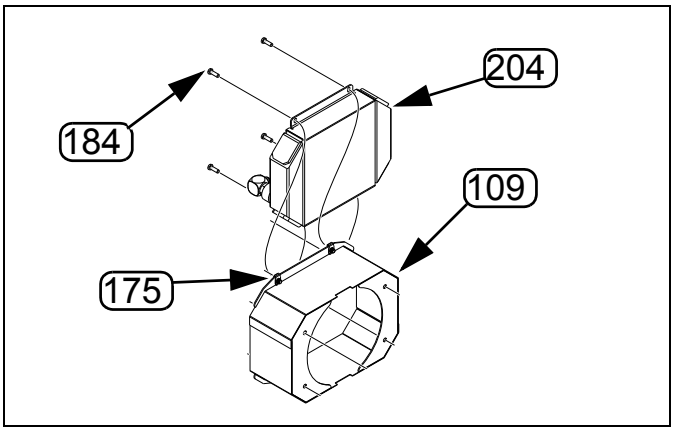

Figure 36: 34632
Break Down Cooler

6in: Install Cooler Shroud

Refer to Figure 37 (shown with fan cage dismounted for clarity of bolt hole assignment - the cage should already be secured via top and bottom holes)

28. Select one of new:
    109 401-834H 6 IN HYD FAN SHROUD
    and four sets saved fasteners ④.

    Attach the shroud through the fan cage holes, to the fan housing, using the saved fasteners.

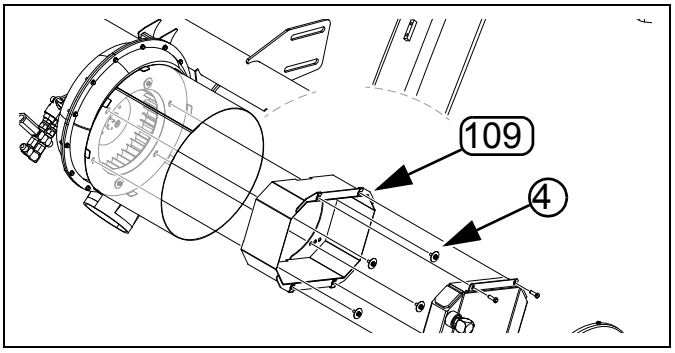

Figure 37: 36376
Install Cooler Shroud

6in: Orient Cooler Elbows

This page applies only to 6-inch/6-cage-screw fans. For 8-inch fans, continue page 38.

Refer to Figure 38

29. Set the fan cooler 204 horizontally on a work surface (mounting holes at top and bottom). This is the orientation of the cooler after final installation.

    Loosen the jam nuts of the elbow fittings ⑥. Rotate the inlet JIC ends to point at the angles shown. When installed in the fan cage, these orientations point roughly at top center and bottom center of the cage.

    Tighten the jam nuts (see page 88 for fitting torque).

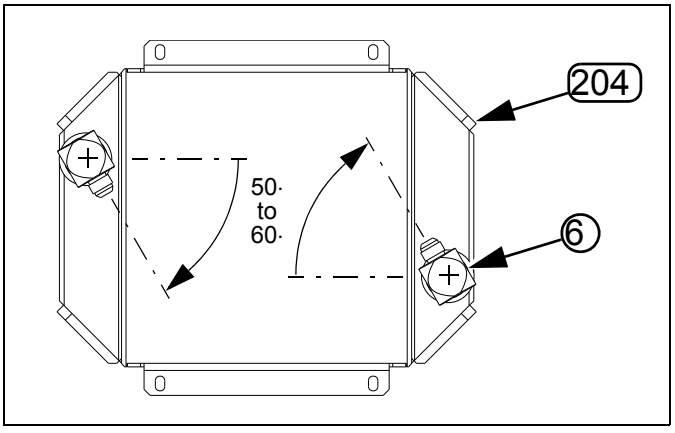

Figure 38: 34635
6in: Orient Elbows

6in: Re-Assemble Fan Cooler

Refer to Figure 39

30. Select the cooler:
    (204) 810-804C C12 HYD OIL COOLER
    and four sets saved:
    (184) 802-159C HHCS 5/16-18X1 GR5
    With the elbow fittings toward the cap end of the fan, use the bolts (184) to re-attach the fan cooler ((204) or (206)) to the shroud (109) at the nut clips (175).

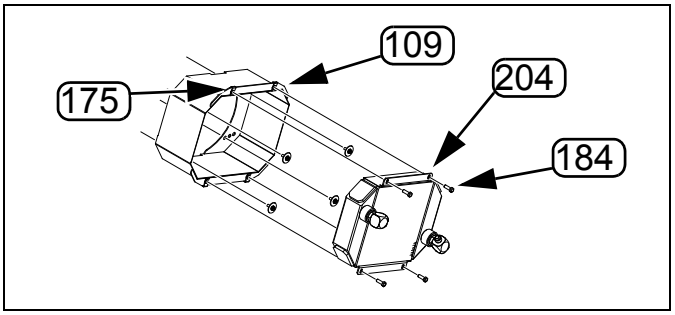

Figure 39: 36376
Re-Assemble Cooler

6in: Modify Fan Cage

Refer to Figure 40

31. Prepare an exit opening in the fan cage for the cooler hoses. The hole needs to be:
    - located at bottom center of the fan cage,
    - on the center-line of the MJIC elbow ports,
    - wide enough for a 3/4 FJIC hose fitting, about: 3.2 cm ($1^1/_4$ inches)[a]
    - long enough for one hose diameter plus one 3/4 FJIC or 7/8 FJIC hose fitting, about 5.7 cm ($2^1/_4$ inches)[a] total, and
    - have a smooth edge. Making cuts (- - -) as shown, and folding back the cage edges, to the inside, provides an adequately smooth edge.

    a. For assembly 401-143L, with 7/8 JIC hose ends, use 3.8 cm ($1^1/_2$ inches) wide, 6.4 cm ($2^1/_2$ inches) long

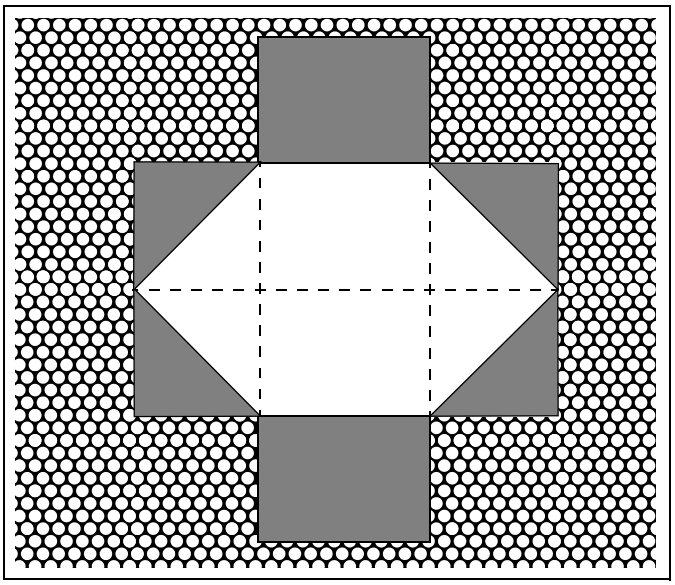

Figure 40:
6in: Hose Opening in Cage

📖 If an existing rpm sensor lead hole is present, and at a suitable location, enlarge it for hose use.

6in Fan: Attach Cooler Hoses & Close

This page applies only to 6-inch/6-cage-screw fans. For 8-inch fans, continue page 38.

6in Fan: Cooler Inlet Hose

📖 Model YP2425F (kit 411-014A) has two coolers. Inlet and outlet hoses are different for each cooler.
Fan#1 is the forward fan.
Fan#2 is the rear fan.

Refer to Figure 41

32. Select one new cooler inlet hose (n) from the table below (hose is kit dependent).
33. Route the hose through the hole prepared at step 31. Connect it to the upper fitting on the cooler.
34. Mark the free end of this hose “INLET”. This step is particularly important for kits using identical inlet and outlet hoses and/or for short hoses which may not be marked with a part number at both ends.

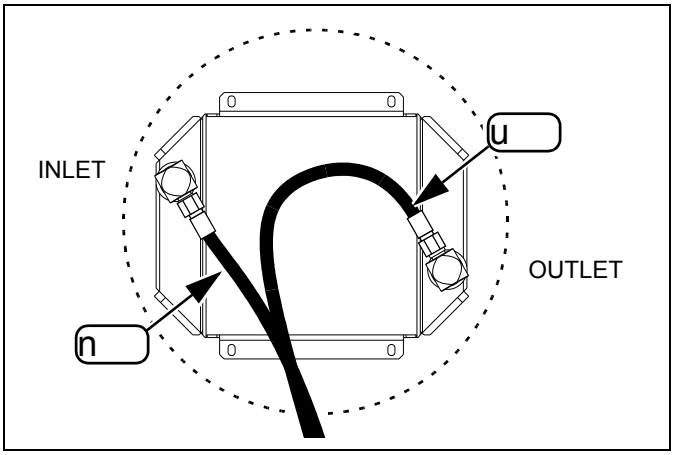

Figure 41: 34636
Cooler Hoses

35. Select one new cooler outlet hose (u) from the table below (hose is kit dependent).

    Route the hose through the hole prepared at step 31. Connect it to the lower fitting on the cooler.

36. Mark the free end of this hose “OUTLET”.

📖 The external ends of these hoses are not connected at this time.

6in: Reinstall Fan Cap

Refer to Figure 42

37. Position the saved fan screen cap ② on the fan screen ③, aligning existing screw holes. Secure cap to screen with saved sheet metal screws ①.

38. Continue at “**Install Oil Reservoir**” on page 41.

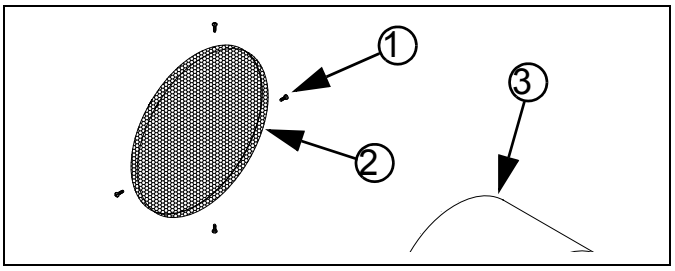

Figure 42:
Close Fan Cage

34631

6in Fan Hose Reference

Kit	Fan	Cooler Inlet Hose (n)
401-934A	-	(246) 841-196C HH1/2R2 024 3/4FJIC
401-936A	-	(246) 841-196C HH1/2R2 024 3/4FJIC
401-938A	-	(225) 811-279C HH1/2R2 060 3/4FJIC
401-939A	-	(224) 811-269C HH1/2R2 036 3/4FJIC
401-941A	-	(224) 811-269C HH1/2R2 036 3/4FJIC
401-943A	-	(246) 841-196C HH1/2R2 024 3/4FJIC
401-945A	-	(226) 811-291C HH1/2R2 072 3/4FJIC
411-014A	1	(223) 811-279C HH1/2R2 060 3/4FJIC connected to fan outlet tee later
	2	(223) 811-279C HH1/2R2 060 3/4FJIC from cooler #1
411-138A	-	(266) 841-921C HH5/8R2 032 7/8FJIC
411-147A	-	(279) 851-345C HH5/8R2 060 7/8FJIC

Kit	Fan	Outlet Hose (u)
401-934A	-	Existing fan return hose at fan.
401-936A	-	Existing fan return hose at fan.
401-938A	-	Existing fan return hose at fan.
401-939A	-	(247) 841-249C HH1/2R2 108 3/4FJIC
401-941A	-	(233) 811-665C HH1/2R2 208 3/4FJIC
401-943A	-	(255) 841-506C HH1/2R2 030 3/4MJIC 3/4FJIC
401-945A	-	Existing fan return hose at fan.
411-014A	1	(223) 811-279C HH1/2R2 060 3/4FJIC to cooler #2
	2	(255) 841-506C HH1/2R2 030 3/4MJIC 3/4FJIC
411-138A	-	Existing fan return hose at fan.
411-147A	-	Existing fan return hose at fan.

Install 8-Inch Fan Cooler

This page applies only to 8-inch/4-cage-screw fans. For 6-inch fans, see page 33.

8in: Dismount Screen Assembly

Refer to Figure 43 (the fan screen extension (173) is not present at dismount and is added at step 58 on page 40)

8in: Remove Screen Cap and Rain Cover

39. Remove and save all fasteners (① and (27), not all shown) securing the cap ② and rain cover (53) to the screen ③.

🕮 The cap and cover screws are different sizes.

40. Remove and save the screen cap, rain cover and screws.

8in: Dismount Sensor

Note which two holes are used for the sensor bracket, and which two only for the fan screen.

41. Disconnect the sensor lead outside the fan screen.
42. Remove and save two sets of fasteners ④ securing the sensor bracket to the fan housing.
43. Remove and save the sensor assembly.

8in: Dismount Fan Screen

🕮 The fan housing and fan screen are eccentric in shape. Although the four mounting holes may line up in various orientations of the screen, only one orientation is correct.

44. Make an alignment mark on the fan screen and on the fan housing, to indicate factory alignment. Or take a photograph for reference.
45. Loosen or remove the last two sets of fasteners securing the fan screen to the fan housing.

8in: Break Down Cooler Assembly

🕮 The shroud (119) cannot be installed with the cooler (206) mounted.

46. Remove and save four sets of:
    (193) 803-043C NUT HEX WHIZ 5/16-18 PLT
    Separate the cooler (206) from the shroud (119).

8in: Install Screen and Shroud

🕮 It may be easier to use two saved screws, without washers, at the sensor bracket locations to temporarily hold the fan screen ③ and shroud (119) in place while seated the screws and washers at the other two fan housing holes.

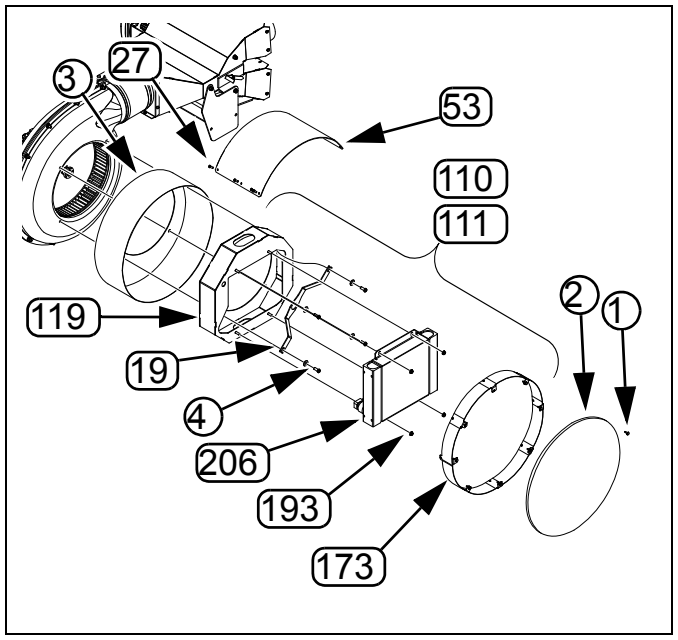

Figure 43: 36377
8 in. Fan Cooler Arrangement

47. Select the shroud:
    (119) 401-958H 8IN FAN HYD OIL COOLER
    the saved fan screen ③ and
    two sets saved fasteners ④.

    Align the fan screen as marked or shown in your photo. Place the shroud inside the screen, with the cutaway corner on the bottom and facing away from the fan outlet. Loosely secure both to the fan housing using the saved fasteners.

8in: Install Sensor Bracket

48. Re-install the sensor bracket using two sets of saved fasteners. Fully tighten all four sets of fasteners securing the screen and bracket to the fan housing.

8in: Adjust Sensor Gap

🕮 The re-installed sensor is now further away from the fan hub than prior to kit installation. The sensor gap must be reset.

49. Loosen the jam nuts on the sensor. Check for axial play on the fan hub; if there is any, pull the hub toward the sensor. Screw the sensor toward the hub until contact. Back off one turn. Check clearance. Secure jam nuts.

8in: Orient Cooler Elbows

Refer to Figure 44

50. Set the fan cooler (206) horizontally on a work surface (mounting holes at top and bottom). This is the orientation of the cooler after final installation.

    Loosen the jam nuts of the elbow fittings ⑥. Rotate the inlet JIC ends to point at the angles shown. When installed in the fan cage, these orientations point roughly at top center and bottom center of the cage.

    Tighten the jam nuts (see page 88 for fitting torque).

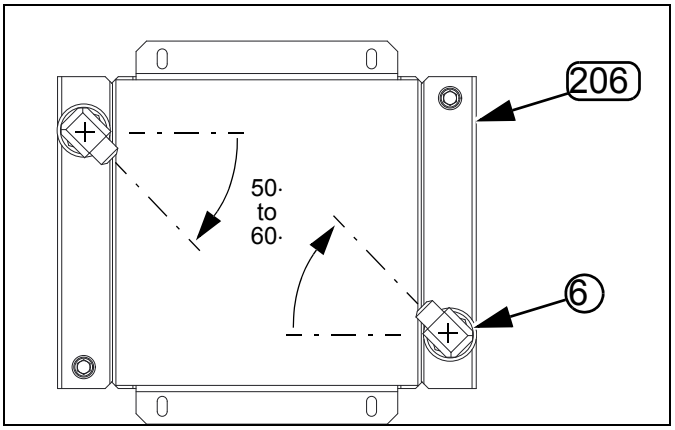

Figure 44:
8in: Orient Elbows
36379

8in: Install Cooler Hoses

Refer to Figure 45

51. Select one new cooler inlet hose (n) from the table below (hose is kit dependent).
52. Mark the free end of this hose “INLET”. This step is particularly important for kits using identical inlet and outlet hoses and/or for short hoses which may not be marked with a part number at both ends.
53. Select one new cooler outlet hose (u) from the table below (hose is kit dependent).
54. Mark the free end of this hose “OUTLET”.

🕮 The external ends of these hoses are not connected at this time.

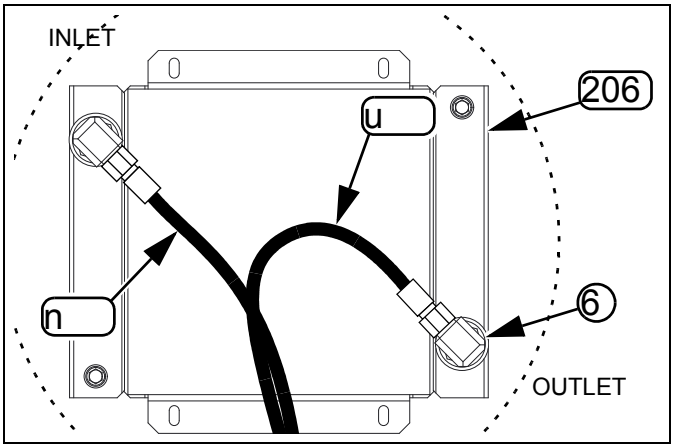

Figure 45:
8in: Connect Hoses
36379

8in Fan Hose Reference

Kit	Cooler Inlet Hose (n)
401-935A	(223) 811-279C HH1/2R2 060 3/4FJIC
401-937A	(223) 811-279C HH1/2R2 060 3/4FJIC
401-940A	(223) 811-279C HH1/2R2 060 3/4FJIC
401-942A	(223) 811-279C HH1/2R2 060 3/4FJIC
401-944A	(266) 841-921C HH5/8R2 032 7/8FJIC
401-946A	(223) 811-279C HH1/2R2 060 3/4FJIC
401-951A	(223) 811-279C HH1/2R2 060 3/4FJIC

Kit	Outlet Hose (u)
401-935A	(255) 841-506C HH1/2R2 030 3/4MJIC 3/4FJIC
401-937A	(255) 841-506C HH1/2R2 030 3/4MJIC 3/4FJIC
401-940A	(223) 811-279C HH1/2R2 060 3/4FJIC
401-942A	(223) 811-279C HH1/2R2 060 3/4FJIC
401-944A	(63) 841-334C HH5/8R2 312 7/8FJIC
401-946A	(255) 841-506C HH1/2R2 030 3/4MJIC 3/4FJIC
401-951A	(255) 841-506C HH1/2R2 030 3/4MJIC 3/4FJIC

8in: Modify Fan Cage

Refer to Figure 46

55. Prepare an exit opening in the fan cage for the cooler hoses. The hole needs to be:
    - located at bottom center of the fan cage,
    - on the center-line of the MJIC elbow ports,
    - wide enough for a 3/4 FJIC hose fitting, about: 3.2 cm ($1^1/_4$ inches)[a]
    - long enough for one hose diameter plus one 3/4 FJIC or 7/8 FJIC hose fitting, about 5.7 cm ($2^1/_4$ inches)[a] total, and
    - have a smooth edge. Making cuts (- - -) as shown, and folding back the cage edges, to the inside, provides an adequately smooth edge.

    a. For assembly 401-143L, with 7/8 JIC hose ends, use 3.8 cm ($1^1/_2$ inches) wide, 6.4 cm ($2^1/_2$ inches) long

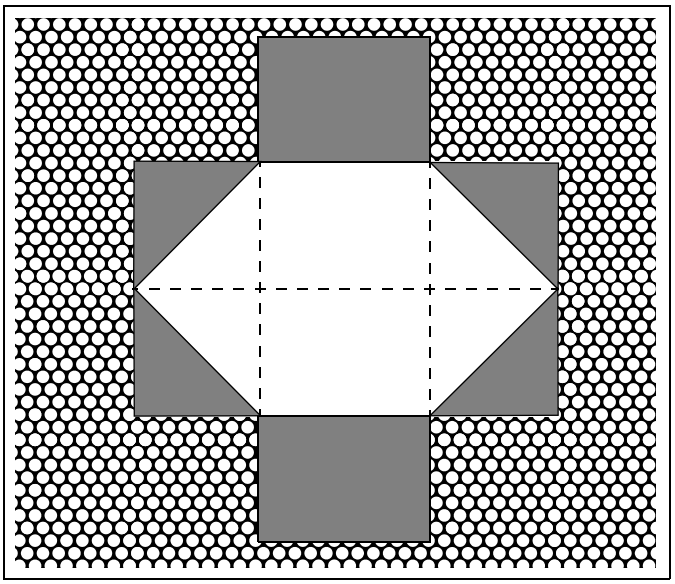

Figure 46:
8in: Hose Opening in Cage

📖 If an existing rpm sensor lead hole is present, and at a suitable location, enlarge it for hose use.

8in: Install Cooler

56. Route the cooler hoses through the hole prepared at step 55.

Refer to Figure 47

57. With the elbows toward the cooler shroud, position the cooler (206) on the threaded studs of the cooler shroud. Secure with 4 whiz nuts:
    (193) 803-043C NUT HEX WHIZ 5/16-18 PLT

8in: Install Screen Extension

58. Select one new:
    (173) 421-615D CRARY 8IN FAN SCREEN EXT
    and eight saved screws originally used to secure the screen cap to the screen. Secure the extension to the screen using the saved screws.

8in: Install Screen Cap

59. Select the saved screen cap ② and eight new:
    (188) 802-800C HWH #12-14X3/4
    Secure the cap to the screen extension by creating new holes from the face of the screen.

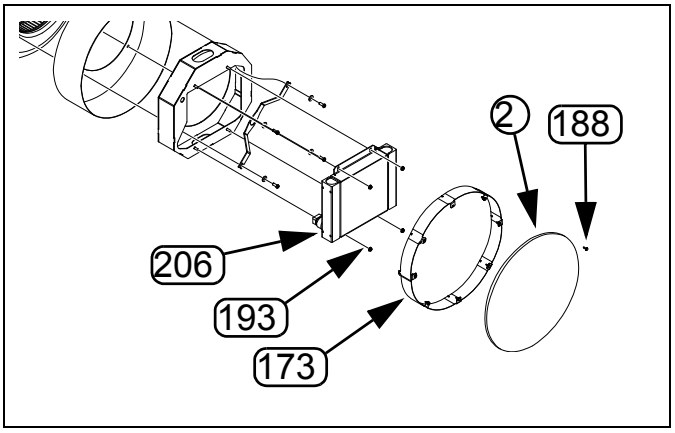

Figure 47: 36377
8 in. Fan Cooler Install

Install Oil Reservoir

Determine Reservoir Location

Refer to Figure 48

60. Determine the reservoir mounting location based on the kit:

Kit	Location	Go To
401-934A	① Tongue	below
401-935A	① Tongue	below
401-936A	① Tongue	below
401-937A	① Tongue	below
401-938A	① Tongue	below
401-939A	② Mainframe	page 42
401-940A	② Mainframe	page 42
401-941A	② Mainframe	page 42
401-942A	② Mainframe	page 42
401-943A	① Tongue	below
401-944A	① Tongue	below
401-945A	① Tongue	below
401-946A	① Tongue	below
401-951A	① Tongue	below
411-014A	① Tongue	below
411-138A	① Tongue	below
411-147A	① Tongue	below

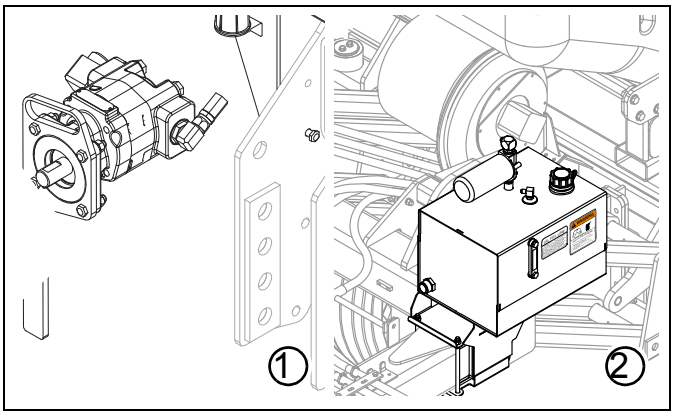

Figure 48: Reservoir Locations 34843 36380

Reservoir on Tongue

These instructions apply to pull-type planters. For other configurations see page referenced from table above.

The tongue location is used with pull-type planters, having either the standard 3-point hitch or the optional hydraulic hitch.

61. Select the reservoir, one of:
    - (129) 401-970L YP30,40 HYD RES ASSY
    - (130) 401-971L YP12,16,44 HYD RES ASSY
    - (132) 401-973L YP24A YD RES ASSY

    and four sets new:
    - (182) 802-128C HHCS 1/2-13X2 GR5
    - (199) 804-016C WASHER FLAT 1/2 SAE PLT
    - (198) 804-015C WASHER LOCK SPRING 1/2 PLT
    - (192) 803-020C NUT HEX 1/2-13 PLT

    Secure the reservoir, sight gauge side forward to the tongue using any four of the six bolt holes in the lower weldments.

Continue at “**Reinstall Compressor(s)**” on page 43.

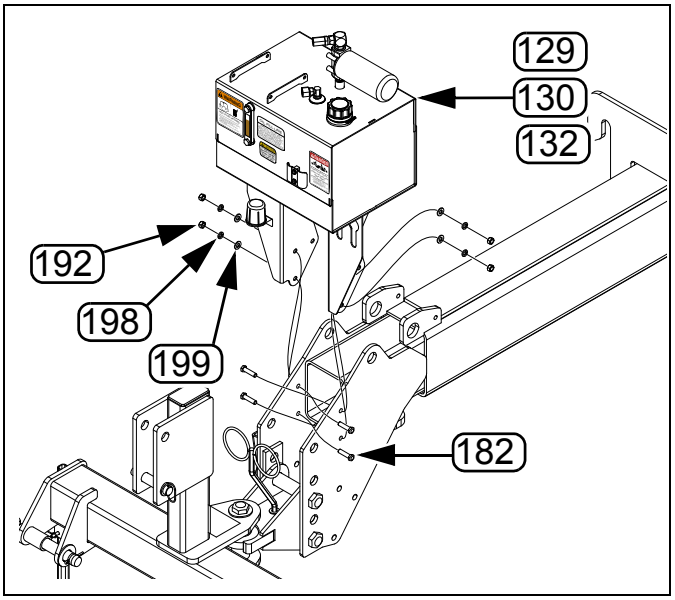

Figure 49: Install Reservoir on Tongue 36382

Reservoir on Mainframe

These instructions apply only to kits 401-939A, 401-940A, 401-941A and 401-942A for planter models 3PYP and 3PYPA. For other kits see the page director table on page 41.

Refer to Figure 50

62. Select one new:
    131 401-972L 3PYP PTO TANK ASSY
    and two sets new:
    186 802-269C HHCS 1/2-13X9 GR5
    194 803-147C NUT HEX NYLOCK 1/2-13
63. Remove any lock channel (not shown) presently pinned to the left rear outside of the mainframe.
64. With the decal face of the reservoir facing left, slide the reservoir mount weldment fully right and fully forward at the left rear corner of the mainframe. Secure with bolts 186 and lock nuts 194.
65. Re-pin any removed lock channel.

Continue at “**Install Flow Control Valve**” on page 45.

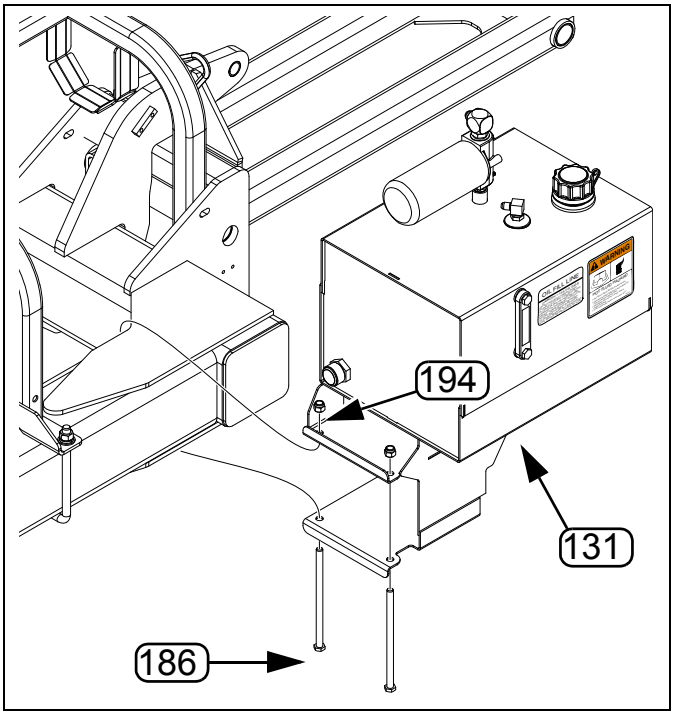

Figure 50: 36381
Install 3PYP/A Reservoir

Stand and Mount

Stand mounts are affixed to the reservoir on YP24, YP25, YP24A, YP25A, YP30 and YP30A models.

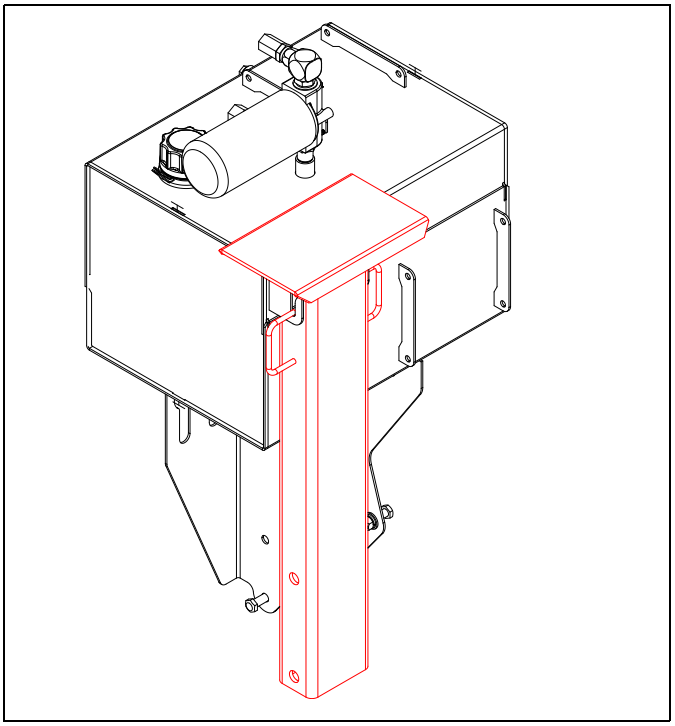

Figure 51: 36381
Stand Mounted on Reservoir

Reinstall Compressor(s)

This topic applies only to pull-type planters with tongue-mounted compressors used for Row-Pro™ or Swath Command™. The compressor(s) were removed at "**Dismount Air Compressor(s)**" on page 30. If no compressors were dismounted, continue at "**Install Flow Control Valve**" on page 45.

Compressor Install Page

Kit	Kit Description	Go To
411-183A	First or only compressor, on Reservoir top, all models	page 43
411-184A	Second compressor, models: 1625AHD/L, YP1220, YP1225/A, YP1625/A	page 44
411-185A	Second compressor, models: YP2425/A/F, YP3010HDP, YP3025/A, YP4010HDP, YP4025/A/F	page 44

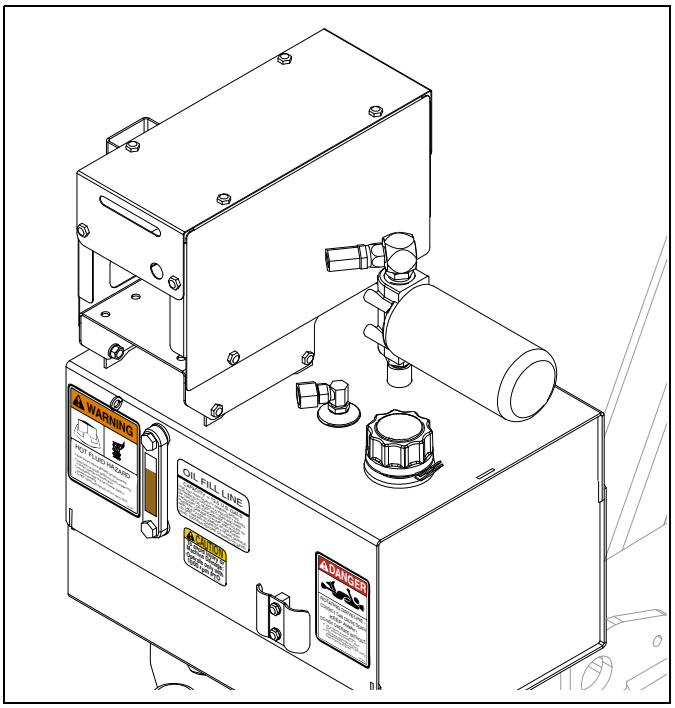

Figure 52: 36387
Compressor Re-installed

Install First or Only Compressor

This applies to compressor relocation kit:
411-183A PTO AIR COMP MNT ASSEMBLY
For other kits, see the page director table on page 43.

Refer to Figure 53

66. Select one new:
    (170) 421-173D PTO TANK AIR COMP MNT PLT
    and four sets new:
    (178) 802-017C HHCS 3/8-16X1 GR5
    (197) 804-013C WASHER LOCK SPRING 3/8 PLT
    (191) 803-014C NUT HEX 3/8-16 PLT

    With the mounting holes to reservoir front, secure the mount plate (170) to the mount tabs on the reservoir, using the bolts (178), lock washers (197) and nuts (191).
67. (not shown) Reinstall the compressor and its housing, using the saved fasteners.

Continue at "**Install Flow Control Valve**" on page 45.

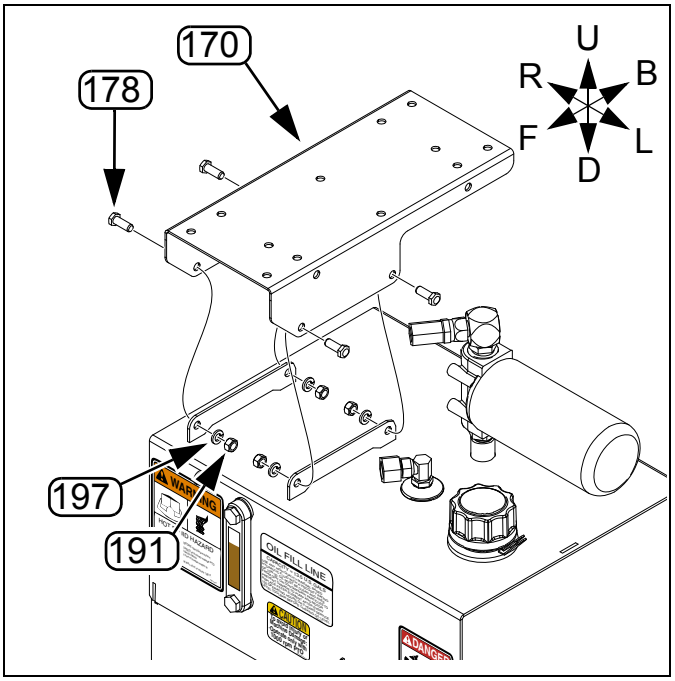

Figure 53: 36386
Install 411-183A Mount

Second Compressor, 1625AH, YP12/16

This applies to compressor relocation kit:
411-184A YP12/16 2ND PTO AIR COMP MNT
For other kits, see the page director table on page 43.

Refer to Figure 54

68. Select one new:
    118 401-957H AIR COMPRESSOR MNT WIDE
    and four sets new:
    178 802-017C HHCS 3/8-16X1 GR5
    197 804-013C WASHER LOCK SPRING 3/8 PLT
    191 803-014C NUT HEX 3/8-16 PLT

    With the platform to reservoir rear, secure the mount 118 to the upper holes off the reservoir supports, using the bolts 178, lock washers 197 and nuts 191.
69. (not shown) Reinstall the compressor and its housing, using the saved fasteners.

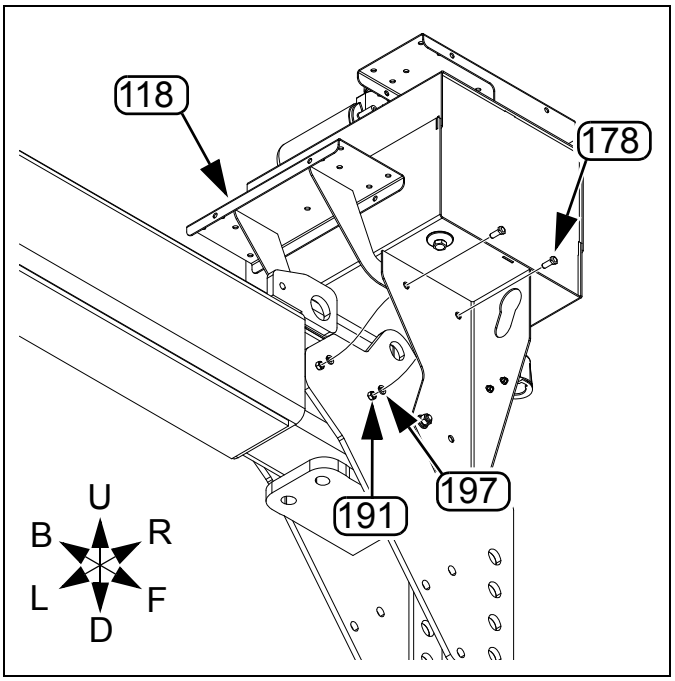

Figure 54: 36388
Install 411-184A Mount

Second Compressor, YP24/30/40/44

This applies to compressor relocation kit:
411-185A YP30,40,44,24 2ND PTO AIR COMP
For other kits, see the page director table on page 43.

Refer to Figure 54

70. Select one new:
    123 401-962H YP30,40,24 AIR COMP TANK MNT
    and four sets new:
    178 802-017C HHCS 3/8-16X1 GR5
    197 804-013C WASHER LOCK SPRING 3/8 PLT
    191 803-014C NUT HEX 3/8-16 PLT

    With the platform to reservoir rear, secure the mount 123 to the rear holes off the reservoir tabs, using the bolts 178, lock washers 197 and nuts 191.
71. (not shown) Reinstall the compressor and its housing, using the saved fasteners.

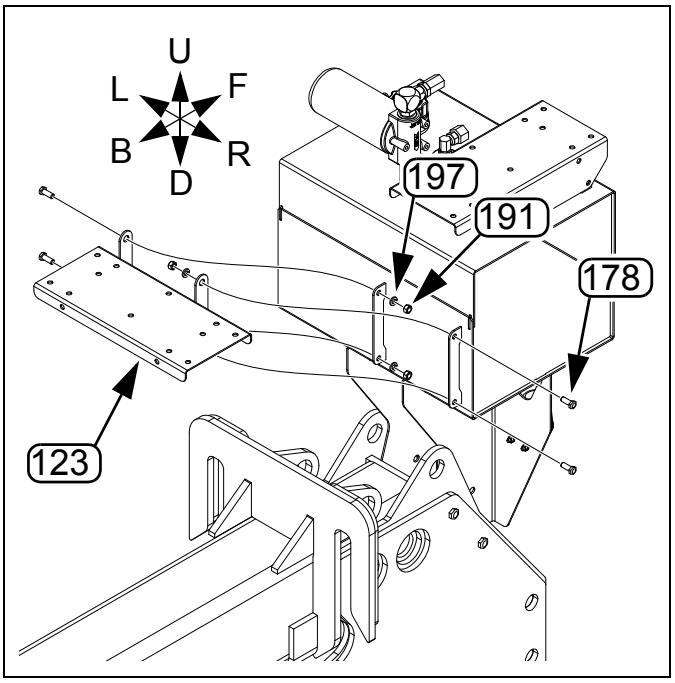

Figure 55: 36389
Install 411-184A Mount

Install Flow Control Valve

When powered by PTO, the primary control of fan speed is the flow control valve, normally located near the fan or fans.

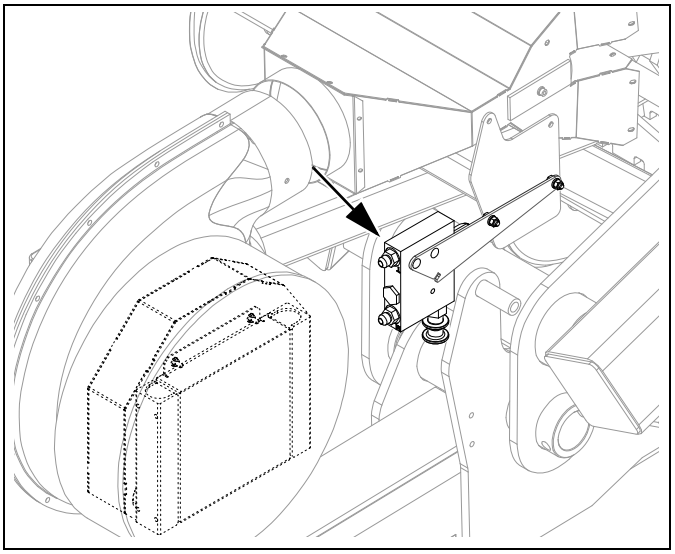

Figure 56: 34843
Flow Control Valve Installed at Fan Manifold

Determine Control Location

Control valve location varies principally by planter mainframe structure and fan location. There are eight locations for the presently available kits. Continue on the page for your kit, per the page director table below.Flow Control Install Page

Kit	Valve Location	Go To
401-934A	Arch Frame Cross Tube	page 46
401-935A	Fan Manifold	page 47
401-936A	Arch Frame Cross Tube	page 46
401-937A	Fan Manifold	page 47
401-938A	Rear Walkboard	page 47
401-939A	3-Point Hitch	page 48
401-940A	3-Point Hitch	page 48
401-941A	3-Point Hitch	page 48
401-942A	3-Point Hitch	page 48
401-943A	Center Walkboard	page 48
401-944A	Center Walkboard	page 48
401-945A	Mainframe LH	page 49
401-946A	Fan Mast	page 49
401-951A	Fan Mast	page 49
411-014A	Center Walkboard	page 48
411-138A	Cart Strut	page 50
411-147A	Rear Walkboard	page 47

Valve on Arch Frame

This location applies to kits 401-934A and 401-936A, for models YP1220, YP1225 and YP1625. For other kits/models, see the page director table on page 45.

Refer to Figure 57 (the valve assembly is shown exploded for clarity - the valve and mount plate are pre-assembled)

72. On the right end of the rear-most cross tube of the arch frame, locate the tab supporting the seed tube support bracket weldment (not shown). Remove and save two sets:
    (28) 803-014C NUT HEX 3/8-16 PLT
    (35) 804-013C WASHER LOCK SPRING 3/8 PLT
    (34) 804-012C WASHER FLAT 3/8 SAE PLT
73. Remove the upper existing bolt:
    (23) 802-079C HHCS 3/8-16X1 1/4 GR5
    Leave the lower bolt in to support the seed tube bracket. Existing bolt (23) is not reused.
74. Select one of new:
    (134) 401-975L YP12,16 HYD DRV FLOW CNTRL
    (135) 401-976L YP12,16 GRND DRV FLOW CNTRL
    and one new:
    (179) 802-022C HHCS 3/8-16X1 1/2 GR5
    Insert the new bolt (179) through the upper break hole of the valve mount plate, and then into the upper tab hole and support bracket. Loosely secure with one set of save flat washer (34), lock washer (35) and nut (28).
75. Remove the lower existing bolt (23). Select one new:
    (179) 802-022C HHCS 3/8-16X1 1/2 GR5
    Insert the new bolt (179) through the lower break hole of the valve mount plate, and then into the lower tab hole and support bracket. Secure both new bolts with the saved flat washers (34), lock washers (35) and nuts (28).

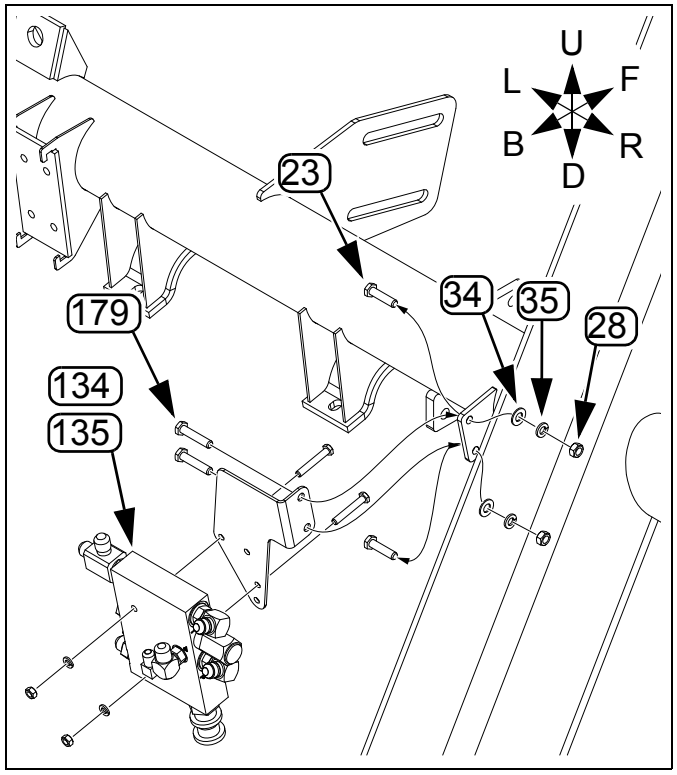

Figure 57: 36390
Valve Installation at Arch Frame

Continue at "**Select one new: 411-145L YP16AHL PTO FLOW CONTROL one new: 806-067C U-BOLT 1/2-13 X 6 1/32 X 4 1/4 and two sets new: 804-015C WASHER LOCK SPRING 1/2 PLT 803-020C NUT HEX 1/2-13 PLT With the valve assembly knob up and to the rear, position the mount bracket on the right side of the strut at the top of the lower tube. Secure with U-bolt , lock washers and nuts .Install Hoses**" on page 51.

Valve on Fan Manifold

This location applies to kits 401-935A and 401-937A, for models YP1225A and YP1625A. For other kits/models, see the page director table on page 45.

Refer to Figure 58

76. Select one of new:
    136 401-977L YP12A,16A GRND DRV FLOW CNTRL
    156 411-003S YP12A,16A PTO CNTRL VALVE ASSY
    and two sets new:
    178 802-017C HHCS 3/8-16X1 GR5
    197 804-013C WASHER LOCK SPRING 3/8 PLT
    191 803-014C NUT HEX 3/8-16 PLT
    With the knob down and the valve to font on the mount, secure the valve assembly to the right hand manifold end plate ① using the bolts 178, lock washers 197 and nuts 191.

Continue at "**Select one new: 411-145L YP16AHL PTO FLOW CONTROL one new: 806-067C U-BOLT 1/2-13 X 6 1/32 X 4 1/4 and two sets new: 804-015C WASHER LOCK SPRING 1/2 PLT 803-020C NUT HEX 1/2-13 PLT With the valve assembly knob up and to the rear, position the mount bracket on the right side of the strut at the top of the lower tube. Secure with U-bolt , lock washers and nuts .Install Hoses**" on page 51.

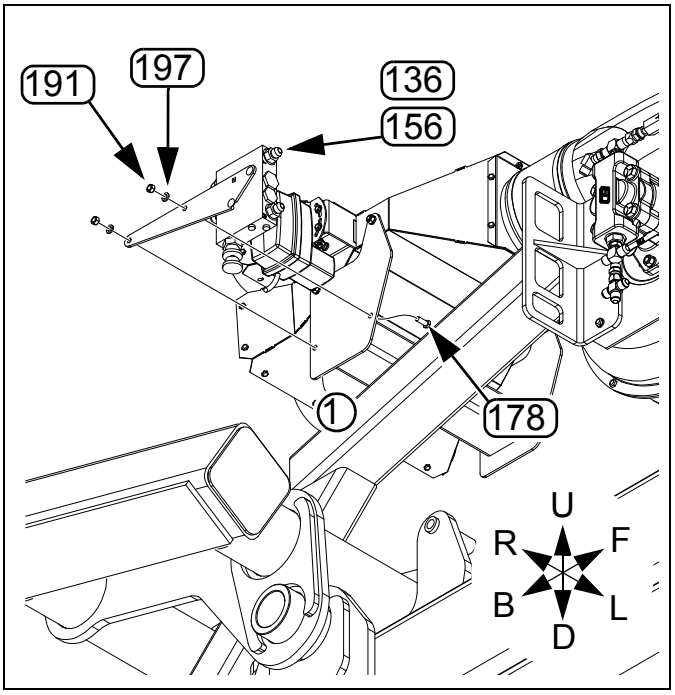

Figure 58: 36398
Valve Installation at Manifold

Valve Under Rear Walkboard

This location applies to kits 401-938A and 411-147A, on models YP1630F and 1625AHD. For other kits/models, see the page director table on page 45.

Refer to Figure 59 (the valve assembly is shown exploded for clarity - the valve and mount plate are pre-assembled)

77. Select one of new:
    137 401-978L YP1630F PTO FLOW MNT ASSY
    159 411-142L YP16AHD PTO FLOW CONTROL
    two new:
    203 806-138C U-BOLT 3/8-16 X 4 1/32 X 3 3/4
    and four sets new:
    197 804-013C WASHER LOCK SPRING 3/8 PLT
    191 803-014C NUT HEX 3/8-16 PLT

    With the valve assembly knob down, position the mount plate on the inside and as high as possible on the left walkboard vertical support tube. Secure with U-bolts 203, lock washers 197 and nuts 191.

Continue at "**Select one new: 411-145L YP16AHL PTO FLOW CONTROL one new: 806-067C U-BOLT 1/2-13 X 6 1/32 X 4 1/4 and two sets new: 804-015C WASHER LOCK SPRING 1/2 PLT 803-020C NUT HEX 1/2-13 PLT With the valve assembly knob up and to the rear, position the mount bracket on the right side of the strut at the top of the lower tube. Secure with U-bolt , lock washers and nuts .Install Hoses**" on page 51.

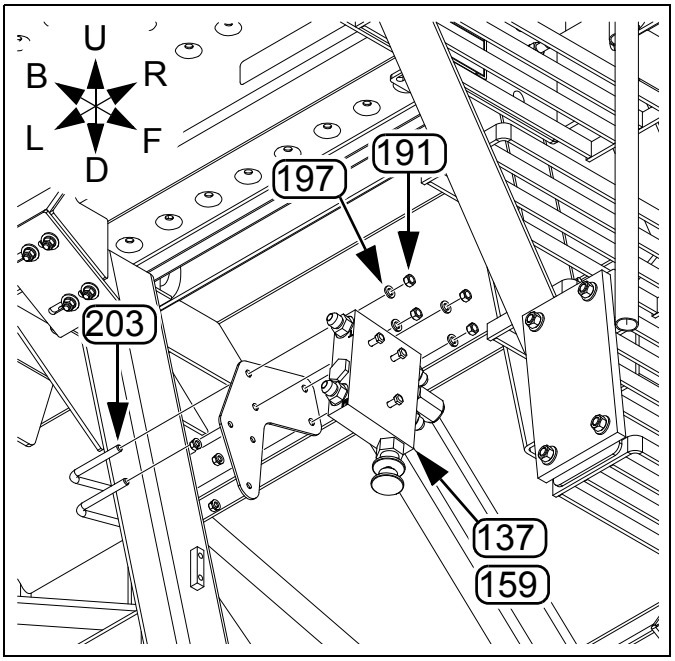

Figure 59: 36391
Rear Walkboard Valve Installation

Valve on Hitch

This location applies to kits 401-939A, 401-940A, 401-941A and 401-942A on models 3PYP and 3PYPA. For other kits/models, see the page director table on page 45.

Refer to Figure 60

78. At the inside edge of the right hitch right plate, remove and save the top set of:
    (29) 803-027C NUT HEX 3/4-10 PLT
    (36) 804-023C WASHER LOCK SPRING 3/4 PLT
    (24) 802-086C HHCS 3/4-10X2 3/4 GR5
79. Loosen the nut on the next bolt down (24).
80. Select one new of:
    (138) 401-979L 3PYP PTO FLOW CNTRL GND DRV
    (139) 401-980L 3PYP PTO FLOW CNTRL HYD DRV
    Adjust the position of the storage mount (141) as necessary for clearance. Slide the lower cut of the mounting plate under the head of the loosened bolt (24). Insert the removed bolt (24) through the upper hole of the mounting plate. Secure the plate and hitch with the existing lock washers (36) and nuts (29).
81. Secure the fasteners for the storage mount (141).

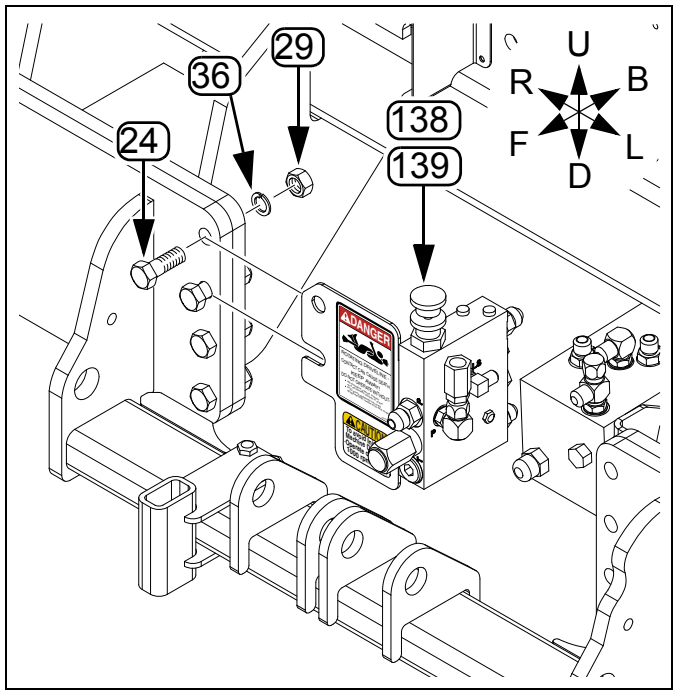

Figure 60: Valve Installation on Hitch 36392

Continue at "**Select one new: 411-145L YP16AHL PTO FLOW CONTROL one new: 806-067C U-BOLT 1/2-13 X 6 1/32 X 4 1/4 and two sets new: 804-015C WASHER LOCK SPRING 1/2 PLT 803-020C NUT HEX 1/2-13 PLT With the valve assembly knob up and to the rear, position the mount bracket on the right side of the strut at the top of the lower tube. Secure with U-bolt , lock washers and nuts .Install Hoses**" on page 51.

Valve Under Center Walkboard

This location applies to kits 401-943A, 401-944A, 411-014A and on models YP2425, YP2425A and YP2425F. For other kits/models, see the page director table on page 45.

Refer to Figure 61

82. Select one of new:
    (116) 401-931L YP24A CONTROL VALVE ASSY
    (117) 401-932L YP24 FAN CONTROL VALVE ASSY
    one new:
    (164) 421-136D YP24 HYD VALVE REAR MNT PLT
    and four sets new:
    (187) 802-390C HHCS 5/16-18X3 1/4 GR5
    (196) 804-009C WASHER LOCK SPRING 5/16 PLT
    (190) 803-008C NUT HEX 5/16-18 PLT

    With the valve assembly knob down, position the mount plate, to the left, on the left tube supporting the walkboard rungs, as close to the fan (front fan on YP2425F) as practical. Secure with rear mount plate (164), bolts (187), lock washers (196) and nuts (190).

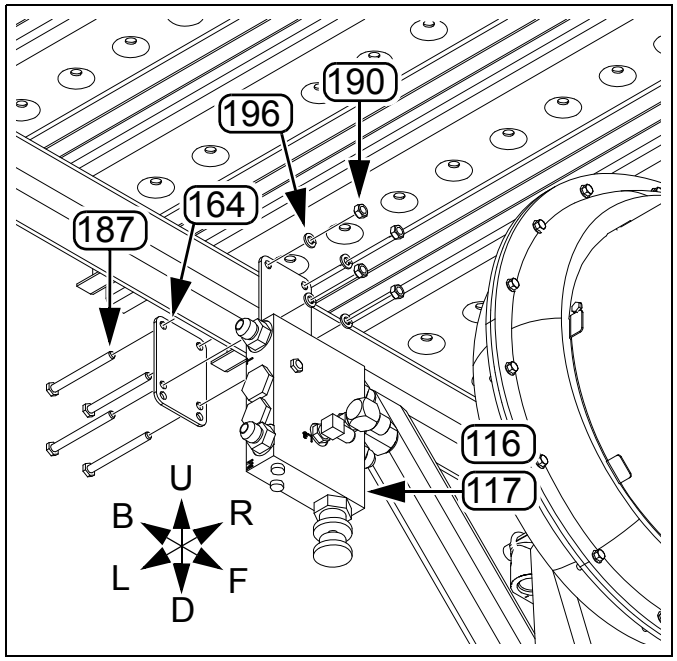

Figure 61: Center Walkboard Installation 36393

Continue at "**Select one new: 411-145L YP16AHL PTO FLOW CONTROL one new: 806-067C U-BOLT 1/2-13 X 6 1/32 X 4 1/4 and two sets new:**

804-015C WASHER LOCK SPRING 1/2 PLT 803-020C NUT HEX 1/2-13 PLT With the valve assembly knob up and to the rear, position the mount bracket on the right side of the strut at the top of the lower tube. Secure with U-bolt , lock washers and nuts .Install Hoses" on page 51.

Valve on Mainframe LH

This location applies to kit 401-945A, for models YP3010HDP, YP3025, YP4010HDP and YP4025. For other kits/models, see the page director table on page 45.

Refer to Figure 61

83. Select one new:
    (157) 411-004L YP30,40 PTO FLOW CONTROL
    one new:
    (201) 806-026C U-BOLT 1/2-13 X 7 1/32 X 8 1/4
    and two new:
    (194) 803-147C NUT HEX NYLOCK 1/2-13

    With the valve assembly knob down, and Port LS to implement left, position the mount plate on the left mainframe tube, clear of stiffener plates and gussets. Secure with U-bolt (201) and nuts (194).

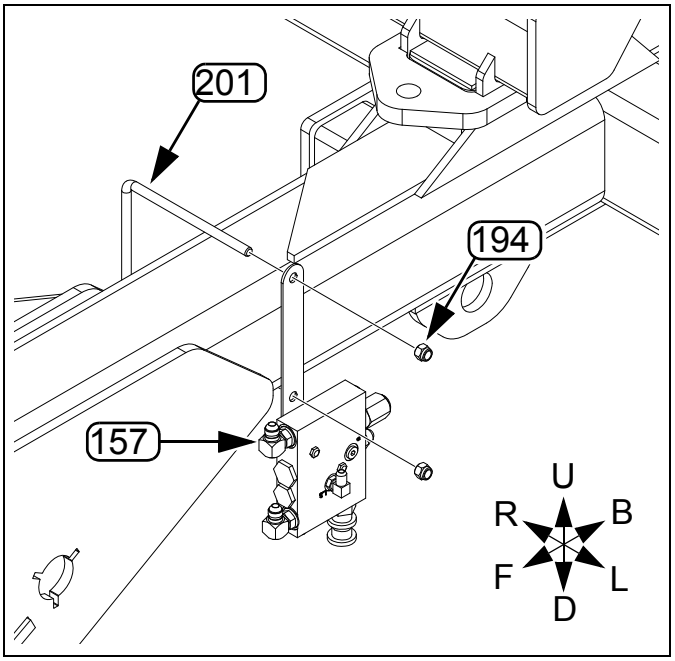

Figure 62: Mainframe LH Installation 36394

Continue at "**Select one new: 411-145L YP16AHL PTO FLOW CONTROL one new: 806-067C U-BOLT 1/2-13 X 6 1/32 X 4 1/4 and two sets new: 804-015C WASHER LOCK SPRING 1/2 PLT 803-020C NUT HEX 1/2-13 PLT With the valve assembly knob up and to the rear, position the mount bracket on the right side of the strut at the top of the lower tube. Secure with U-bolt , lock washers and nuts .Install Hoses**" on page 51.

Valve on Fan Mast

This location applies to kits 401-946A and 401-951A, on models YP3025A, YP4025A and YP4425A. For other kits/models, see the page director table on page 45.

Refer to Figure 63

84. Select one new:
    (117) 401-932L YP24 FAN CONTROL VALVE ASSY
    one new:
    (164) 421-136D YP24 HYD VALVE REAR MNT PLT
    and four sets new:
    (187) 802-390C HHCS 5/16-18X3 1/4 GR5
    (196) 804-009C WASHER LOCK SPRING 5/16 PLT
    (190) 803-008C NUT HEX 5/16-18 PLT

    With the valve assembly knob down and forward, position the mount plate, to the right, on the left face of the fan mast tube, about halfway along the exposed tube length. Secure with rear mount plate (164), bolts (187), lock washers (196) and nuts (190).

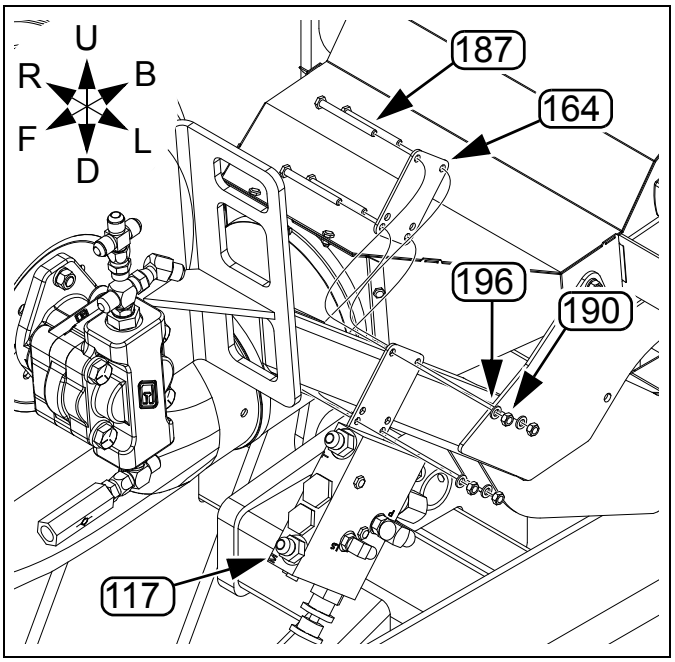

Figure 63: Fan Mast Valve Installation 36396

Continue at "**Select one new: 411-145L YP16AHL PTO FLOW CONTROL one new: 806-067C U-BOLT 1/2-13 X 6 1/32 X 4 1/4 and two sets new: 804-015C WASHER LOCK SPRING 1/2 PLT 803-020C NUT HEX 1/2-13 PLT With the valve**

assembly knob up and to the rear, position the mount bracket on the right side of the strut at the top of the lower tube. Secure with U-bolt , lock washers and nuts .Install Hoses” on page 51.

Valve on Cart Strut

This location applies to kit 411-138A, for model 1625AHL. For other kits/models, see the page director table on page 45.

Refer to Figure 61

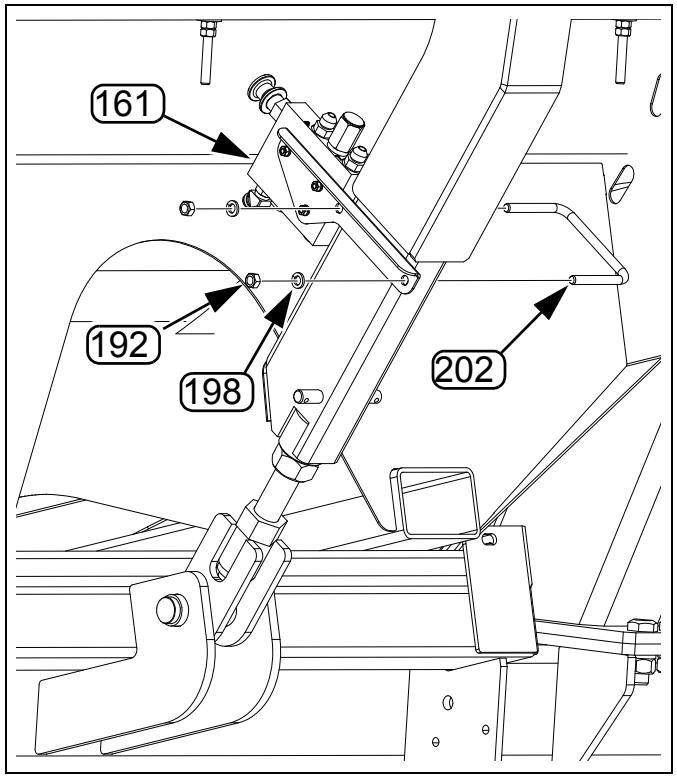

Figure 64:
Mainframe LH Installation

85. Select one new:
    (161) 411-145L YP16AHL PTO FLOW CONTROL
    one new:
    (202) 806-067C U-BOLT 1/2-13 X 6 1/32 X 4 1/4
    and two sets new:
    (198) 804-015C WASHER LOCK SPRING 1/2 PLT
    (192) 803-020C NUT HEX 1/2-13 PLT

    With the valve assembly knob up and to the rear, position the mount bracket on the right side of the strut at the top of the lower tube. Secure with U-bolt (202), lock washers (198) and nuts (192).Install Hoses

Existing Hose Identification

Existing hoses may or may not be reused, and may need to be marked when disconnected. Where not otherwise uniquely identified by part number and connector style, this manual uses a common set of letter assignments from the table at right.

Some hoses are separately identified as to hitch end or fan end. The two letters may refer to the same hose in some cases.

Part numbers for existing hoses are not provided in all cases, to reduce clutter, as part numbers hose counts and fittings have changed over time.

Callout	Existing Hose Description
Ⓐ	Fan Pressure, hitch end
Ⓑ	Fan Pressure, fan end
Ⓒ	Fan Case Drain, hitch end
Ⓓ	Fan Return, hitch end
Ⓔ	Fan Return, fan end
Ⓕ	Hydraulic Drive Pressure from Hitch
Ⓖ	Hydraulic Meter Drive Return to Hitch
Ⓗ	Hydraulic Meter Drive Supply at Motor
Ⓙ	Hydraulic Filter to Proportional Valve
Ⓚ	Proportional Valve to Hydraulic Motor
Ⓛ	Fan Bypass Loop
Ⓧ	Fan-to-Fan Pressure (dual fan planters)
Ⓨ	Fan-to-Fan Return (dual fan planters)
Ⓩ	Fan-to-Fan Case Drain (dual fan planters)

Hydraulic Hitch Extension

The additional length of the optional hydraulic tongue requires extension of the pump inlet hose, available as a separately-ordered hose:
YP12, YP16, YP2425, YP2425F, YP30, YP40:
(276) 841-996C HH1 1/4R4 48 1.63MJIC 1.63FJIC
YP2425A:
(277) 841-997C HH1.5R4 48 1 88 JIC 1.88F JIC
No extensions are required for YP4425A.

86. Connect this hose to either the reservoir or the pump at any time during hose installation.

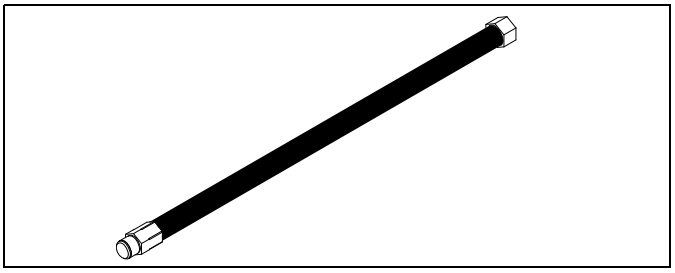

Figure 65: 36399
Hydraulic Tongue Extension Hose

General Hose Installation

Hose routing and connections vary by kit. There are separate layout pages for each kit.

If a hose has different connectors on each end, verify end connections before routing, particularly for long hoses.

The new hoses may be installed in any order. Secure them with any available clamps along their routes.

When hose installation is complete, continue at "**Close-Out**" on page 86.

Kit	Page
401-934A	52
401-935A	54
401-936A	56
401-937A	58
401-938A	60
401-939A	62
401-940A	64
401-941A	66
401-942A	68

Kit	Page
401-943A	70
401-944A	72
401-945A	74
401-946A	76
401-951A	78
411-014A	80
411-138A	82
411-147A	84

401-934A Hose Diagram

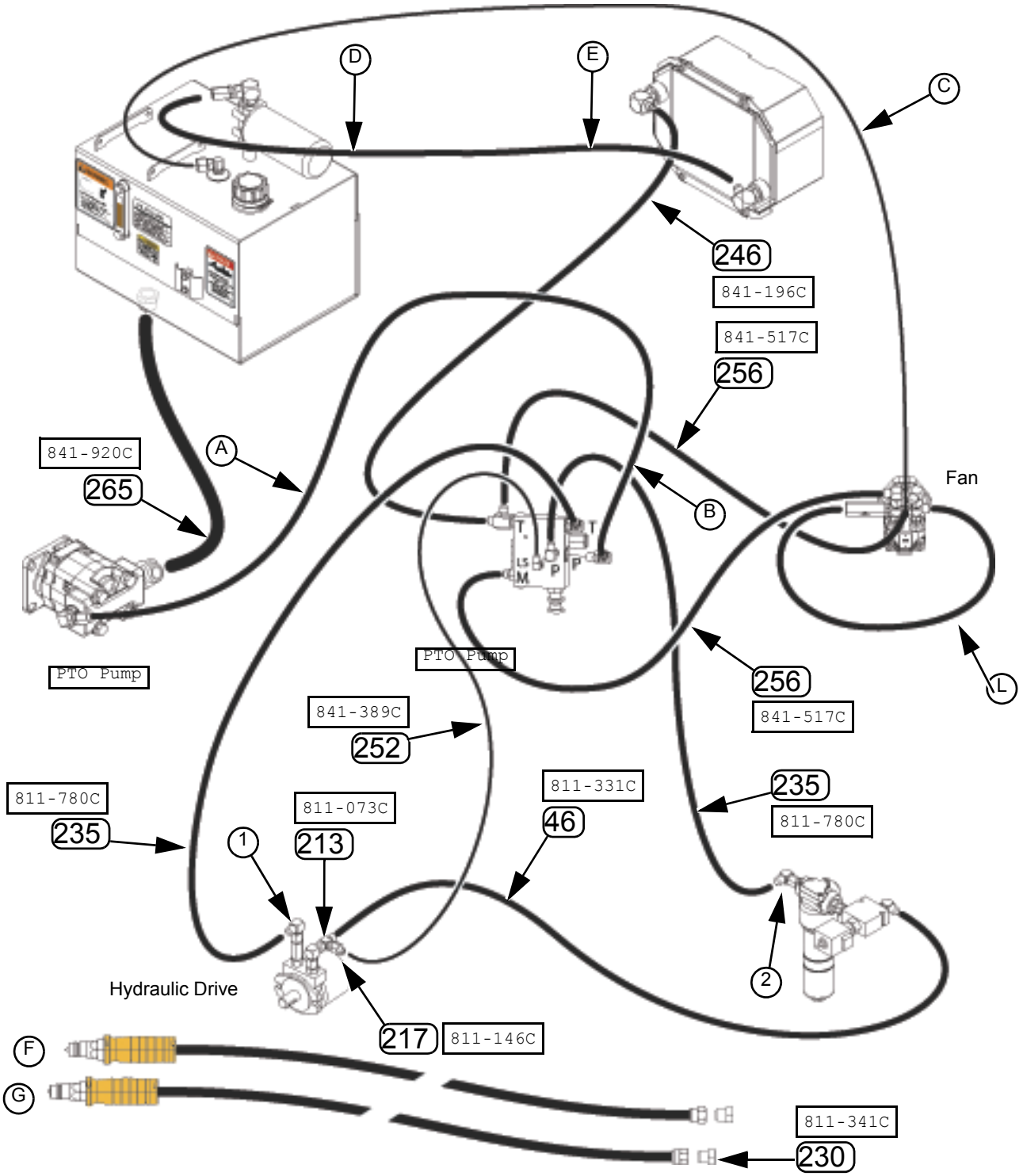

Figure 66: PTO Kit 401-934A Hose Routing
YP1225, YP1625 Finger-Pickup or Singulator Plus™ Hydraulic Drive

36341

401-934A Hose Diagram

Hydraulic Connections	Call-out	Part	Hose Description	Comments
Fan Pressure hose from hitch	Ⓐ, Ⓑ	Existing Hose		Remove hose handles. Disconnect from fan. Reconnect hitch end to PTO pump outlet. Reconnect rear end to flow control valve port P.
Fan Case Drain hose	Ⓒ	Existing Hose		Remove QD fittings at hitch end. Connect hitch end to reservoir case drain inlet.
Fan Return hose from hitch	Ⓓ, Ⓔ	Existing Hose		Remove hose handles. Disconnect from fan. Reconnect hitch end to reservoir inlet. Reconnect rear end to cooler outlet.
Hydraulic Drive Supply hose from hitch	Ⓕ	Existing Hose		No longer used. Hitch end left as-is. Disconnect at filter inlet ②. Cap with 230.
Hydraulic Drive Return hose to hitch	Ⓖ	Existing Hose		No longer used. Hitch end left as-is. Disconnect at motor outlet check valve elbow ①. Cap with 230.
Fan motor loop	Ⓛ	Existing Hose		Left undisturbed.
Hydraulic Drive Motor supply	46	811-331C	Existing Hose HH1/2R2 020 3/4FJIC	Disconnect from elbow at proportional valve. Reconnect to adapter 217 at new tee. Motor end left as-is.
Hydraulic Drive sense tee	213	811-073C	TE 3/4MJIC 3/4MJIC 3/4FJIC	Add to existing inlet elbow at meter drive motor.
Hydraulic Drive Sense adapter	217	811-146C	AD 3/4FJIC 9/16MJIC	Add to new tee 213 at meter drive motor.
Retired hose plug	230	811-341C	PL 3/4MJIC	Plug for retired hoses Ⓕ and Ⓖ.
Hydraulic drive return	235	811-780C	HH1/2R2 094 3/4FJIC	Replaces disconnected hitch line Ⓖ. Connects hydraulic drive motor outlet (at check valve) to flow control valve port T at the edge elbow.
Hydraulic drive supply	235	811-780C	HH1/2R2 094 3/4FJIC	Replaces disconnected hitch line Ⓗ. Connects hydraulic drive filter inlet to flow control valve body face port P.
Cooler Inlet hose	246	841-196C	HH1/2R2 024 3/4FJIC	Connects flow control valve port T (at the end of a tee) to the cooler inlet.
Hydraulic Drive sense hose	252	841-389C	HH1/4R2 095 9/16FJIC	Connects meter drive motor outlet to flow control valve load-sensing port LS.
Fan Return hose	256	841-517C	HH1/2R2 054 3/4FJIC	Connects fan outlet to flow control valve port T at the center port of the edge tee.
Fan Supply hose	256	841-517C	HH1/2R2 054 3/4FJIC	Connects flow control valve port M to fan inlet.
PTO Pump supply hose	265	841-920C	HH1 1/4R4 070 1 5/8FJIC	Connects reservoir outlet to PTO pump inlet.

401-935A Hose Diagram

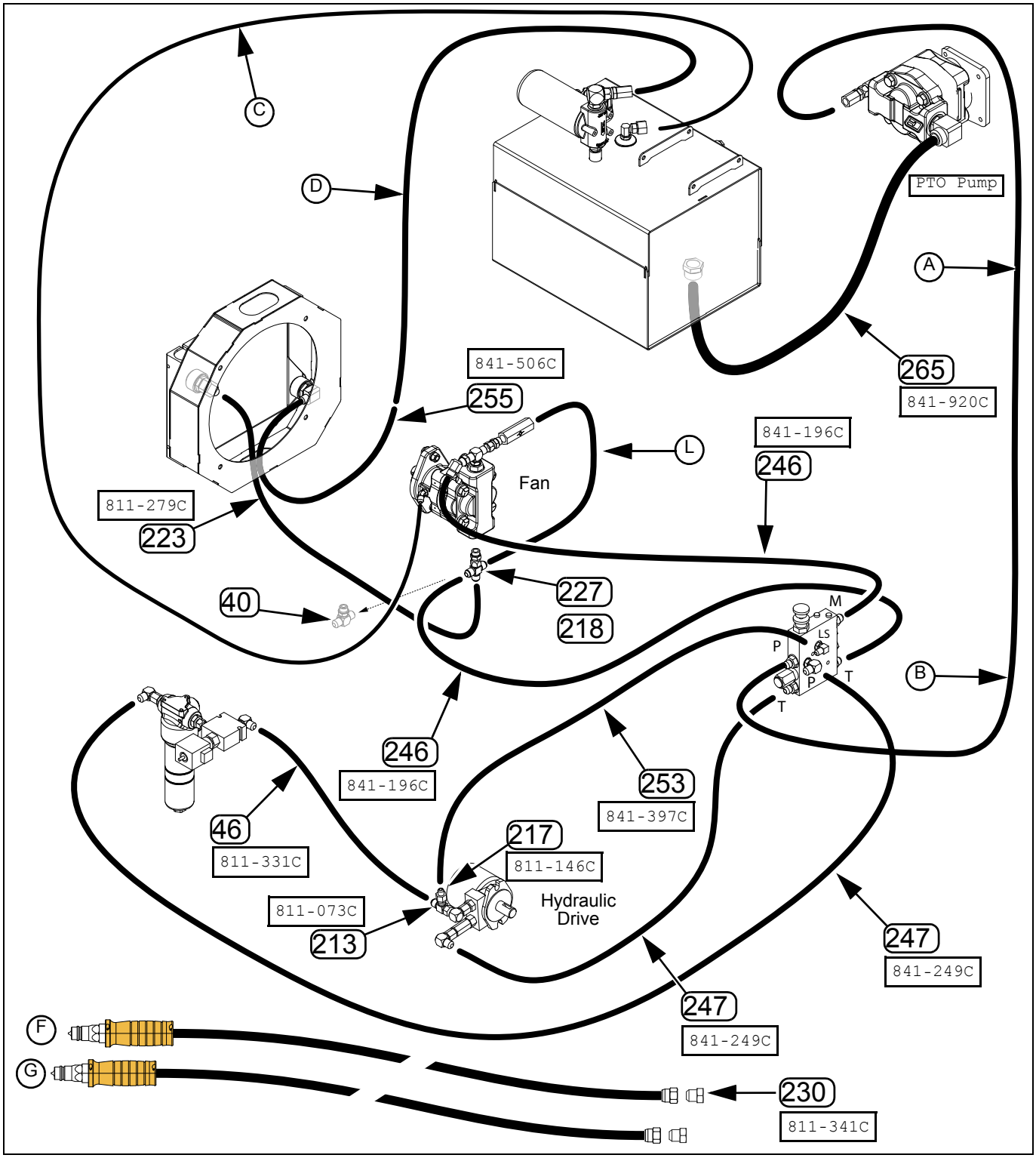

Figure 67: PTO Kit 401-935A Hose Routing
YP1225A, YP1625A Air-Pro® Hydraulic Drive

36342

401-935A Hose Diagram

Hydraulic Connections	Call-out	Part	Hose Description	Comments
Fan Pressure hose from hitch	Ⓐ, Ⓑ	Existing Hose		Remove hose handles. Disconnect from fan. Reconnect hitch end to PTO pump outlet. Reconnect rear end to flow control side port P.
Fan Case Drain hose	Ⓒ	Existing Hose		Remove QD fittings at hitch end. Connect hitch end to reservoir case drain inlet.
Fan Return hose from hitch	Ⓓ, Ⓔ	Existing Hose		Remove hose handles. Disconnect from fan. Reconnect hitch end to reservoir inlet. Reconnect rear end to cooler outlet extension hose 255.
Hydraulic Drive Supply hose from hitch	Ⓕ	Existing Hose		No longer used. Hitch end left as-is. Disconnect at filter inlet. Cap with 230.
Hydraulic Drive Return hose to hitch	Ⓖ	Existing Hose		No longer used. Hitch end as-is. Disconnect at motor outlet check valve elbow. Cap with 230.
Fan Loop	Ⓛ	Existing Hose		Re-connect to new cross 218.
Fan Return Tee	40	811-077C	TE 3/4MORB 3/4MJIC 3/4MJIC	Disconnect fan loop Ⓛ and motor return hoses. Remove tee (no re-used). Replace with 218 and 227.
Hydraulic Drive Motor supply	46	811-331C	Existing Hose HH1/2R2 020 3/4FJIC	Disconnect from elbow at proportional valve. Reconnect to adapter 217 at new tee. Motor end left as-is.
Hydraulic Drive sense tee	213	811-073C	TE 3/4MJIC 3/4MJIC 3/4FJIC	Add to existing elbow at hydraulic drive motor inlet.
Sense Line adapter	217	811-146C	AD 3/4FJIC 9/16MJIC	Add to new tee 213 at hydraulic drive motor inlet.
Motor Return Cross	218	811-147C	CR 3/4MJIC	Add to new adapter 227 at fan return.
Cooler Inlet hose	223	811-279C	HH1/2R2 060 3/4FJIC	Connects fan return at cross 218 to cooler inlet.
Fan Return adapter	227	811-324C	AD 3/4MORB 3/4FJIC	Replaces tee 40 removed at fan return. Add cross 218.
Retired hose plug	230	811-341C	PL 3/4MJIC	Cap for retired hoses Ⓕ and Ⓖ
Fan Return hose	246	841-196C	HH1/2R2 024 3/4FJIC	Connects fan outlet to flow control valve port T.
Fan Supply hose	246	841-196C	HH1/2R2 024 3/4FJIC	Connects flow control valve port M to fan inlet.
Hydraulic drive return	247	841-249C	HH1/2R2 108 3/4FJIC	Replaces disconnected hitch line Ⓖ. Connects hydraulic drive motor outlet (at check valve) to flow control valve port P.
Hydraulic drive supply	247	841-249C	HH1/2R2 108 3/4FJIC	Replaces disconnected hitch line Ⓗ. Connects hydraulic drive filter inlet to flow control valve port L.
PTO Pump supply hose	265	841-920C	HH1 1/4R4 070 1 5/8FJIC	Connects reservoir outlet to PTO pump inlet.
Hydraulic Drive sense hose	253	841-397C	HH1/4R2 115 9/16FJIC	Connects new tee 213 to flow control valve load-sensing port LS.
Cooler Outlet Extension hose	255	841-506C	HH1/2R2 030 3/4MJIC 3/4FJIC	Connects cooler outlet to existing fan-end return hose Ⓔ.

401-936A Hose Diagram

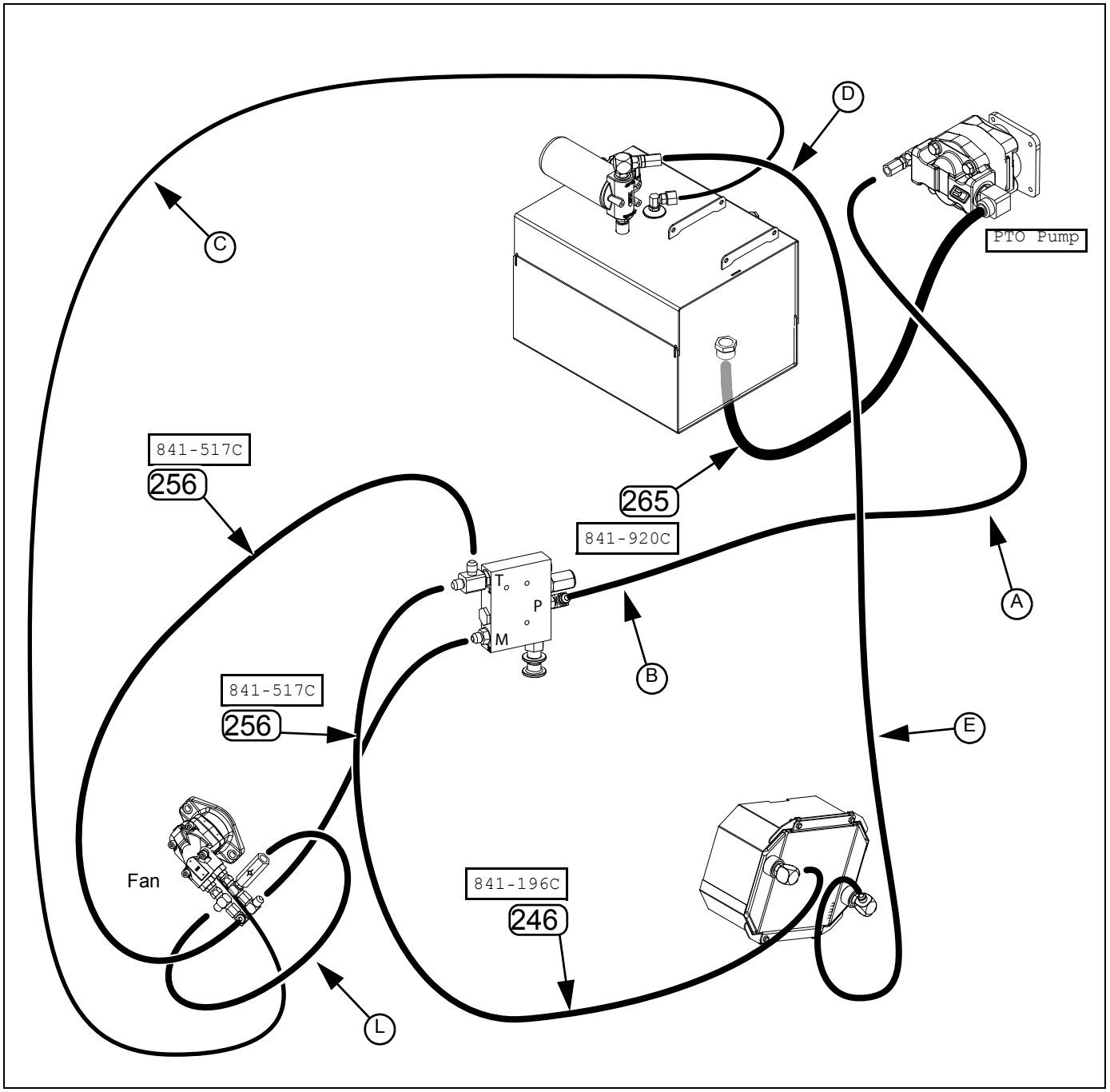

Figure 68: PTO Kit 401-936A Hose Routing
YP1225, YP1625 Finger-Pickup or Singulator Plus™ Ground Drive or Hydraulic Drive models using PTO only for Fan

36343

401-936A Hose Diagram

Hydraulic Connections	Call-out	Part	Hose Description	Comments
Fan Pressure hose from hitch	Ⓐ, Ⓑ	Existing Hose		Remove hose handles. Disconnect from fan. Reconnect hitch end to PTO pump outlet. Reconnect rear end to flow control valve port P.
Fan Case Drain hose	Ⓒ	Existing Hose		Remove QD fittings at hitch end. Connect hitch end to reservoir case drain inlet.
Fan Return hose from hitch	Ⓓ, Ⓔ	Existing Hose		Remove hose handles. Disconnect from fan. Reconnect hitch end to reservoir inlet. Reconnect rear end to cooler outlet.
Fan motor loop	Ⓛ	Existing Hose		Left undisturbed.
Cooler Inlet hose	246	841-196C	HH1/2R2 024 3/4FJIC	Connects flow control valve port T to cooler inlet.
PTO Pump supply hose	265	841-920C	HH1 1/4R4 070 1 5/8FJIC	Connects reservoir outlet to PTO pump inlet.
Fan Return hose	256	841-517C	HH1/2R2 054 3/4FJIC	Connects fan outlet to flow control valve port T.
Fan Supply hose	256	841-517C	HH1/2R2 054 3/4FJIC	Connects flow control valve port M to fan inlet.

401-937A Hose Diagram

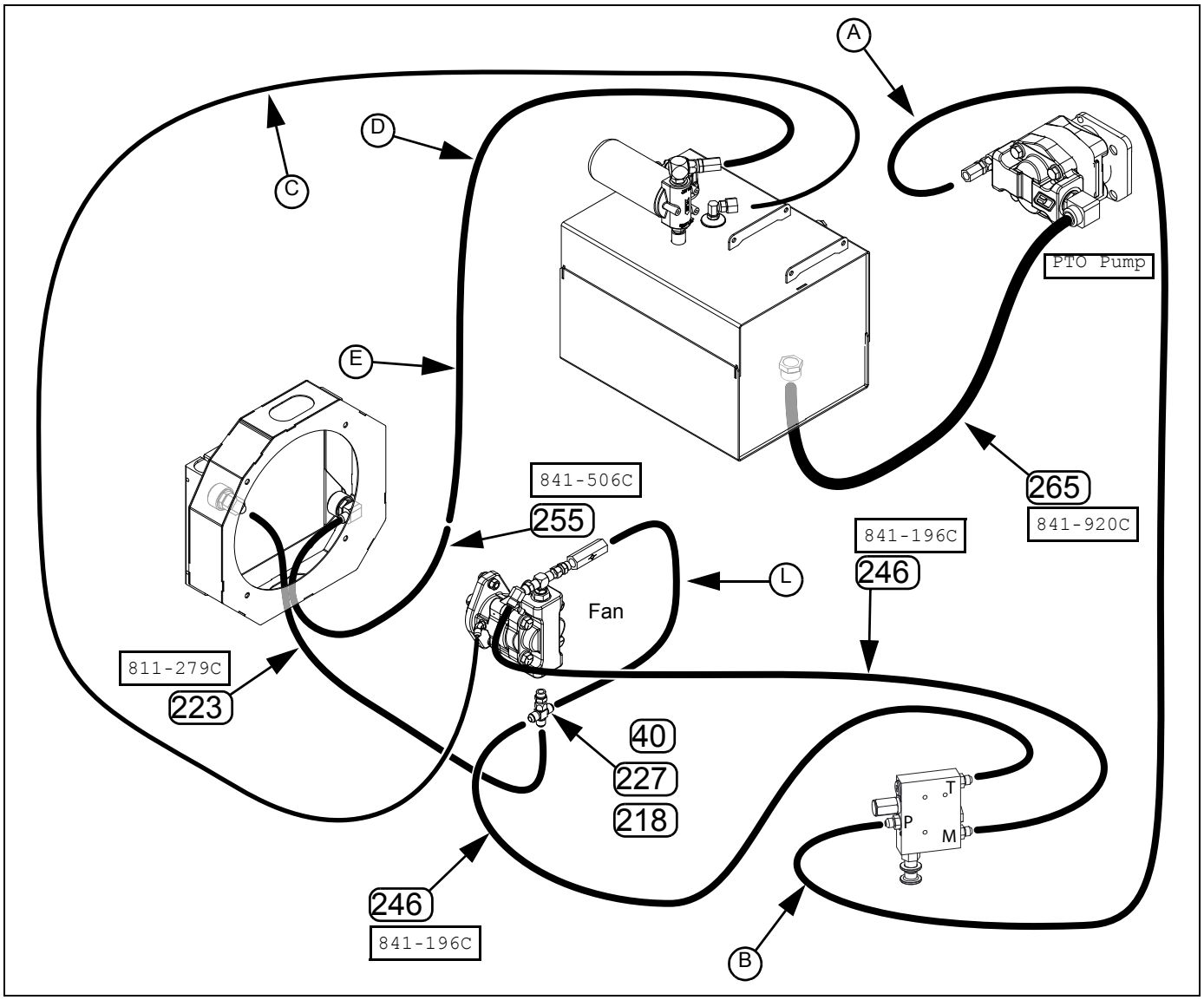

Figure 69: PTO Kit 401-937A Hose Routing
YP1225A, YP1625A Air-Pro® Ground Drive
or Hydraulic Drive models using PTO only for Fan

36345

401-937A Hose Diagram

Hydraulic Connections	Call-out	Part	Hose Description	Comments
Fan Pressure hose from hitch	Ⓐ, Ⓑ	Existing Hose		Remove hose handles. Disconnect from fan. Reconnect hitch end to PTO pump outlet. Reconnect rear end to flow control valve port P.
Fan Case Drain hose	Ⓒ	Existing Hose		Remove QD fittings at hitch end. Reconnect hitch end to reservoir case drain inlet.
Fan Return hose from hitch	Ⓓ, Ⓔ	Existing Hose		Remove hose handles. Disconnect from fan. Reconnect hitch end to reservoir inlet. Reconnect rear end to extension hose (255) from cooler outlet.
Fan motor loop	Ⓛ	Existing Hose		Disconnect hose from tee (40) at motor outlet. Reconnect to new cross (218).
Motor outlet tee	(40)	811-077C	TE 3/4MORB 3/4MJIC 3/4MJIC	Remove. Replace with (227) and (218).
Fan motor outlet	(218)	811-147C	CR 3/4MJIC	Adds cooler connection at motor outlet.
Cooler Inlet hose	(227)	811-279C	HH1/2R2 060 3/4FJIC	Connects fan motor outlet to cooler inlet.
Fan motor outlet	(227)	811-324C	AD 3/4MORB 3/4FJIC	Adapts FORB port to FJIC for cross (218).
Fan Supply hose	(246)	841-196C	HH1/2R2 024 3/4FJIC	Connects flow control valve port M to fan inlet.
PTO Pump supply hose	(265)	841-920C	HH1 1/4R4 070 1 5/8FJIC	Connects reservoir outlet to PTO pump inlet.
Cooler outlet hose	(255)	841-506C	HH1/2R2 030 3/4MJIC 3/4FJIC	Connects cooler outlet to existing fan return hose Ⓔ.

401-938A Hose Diagram

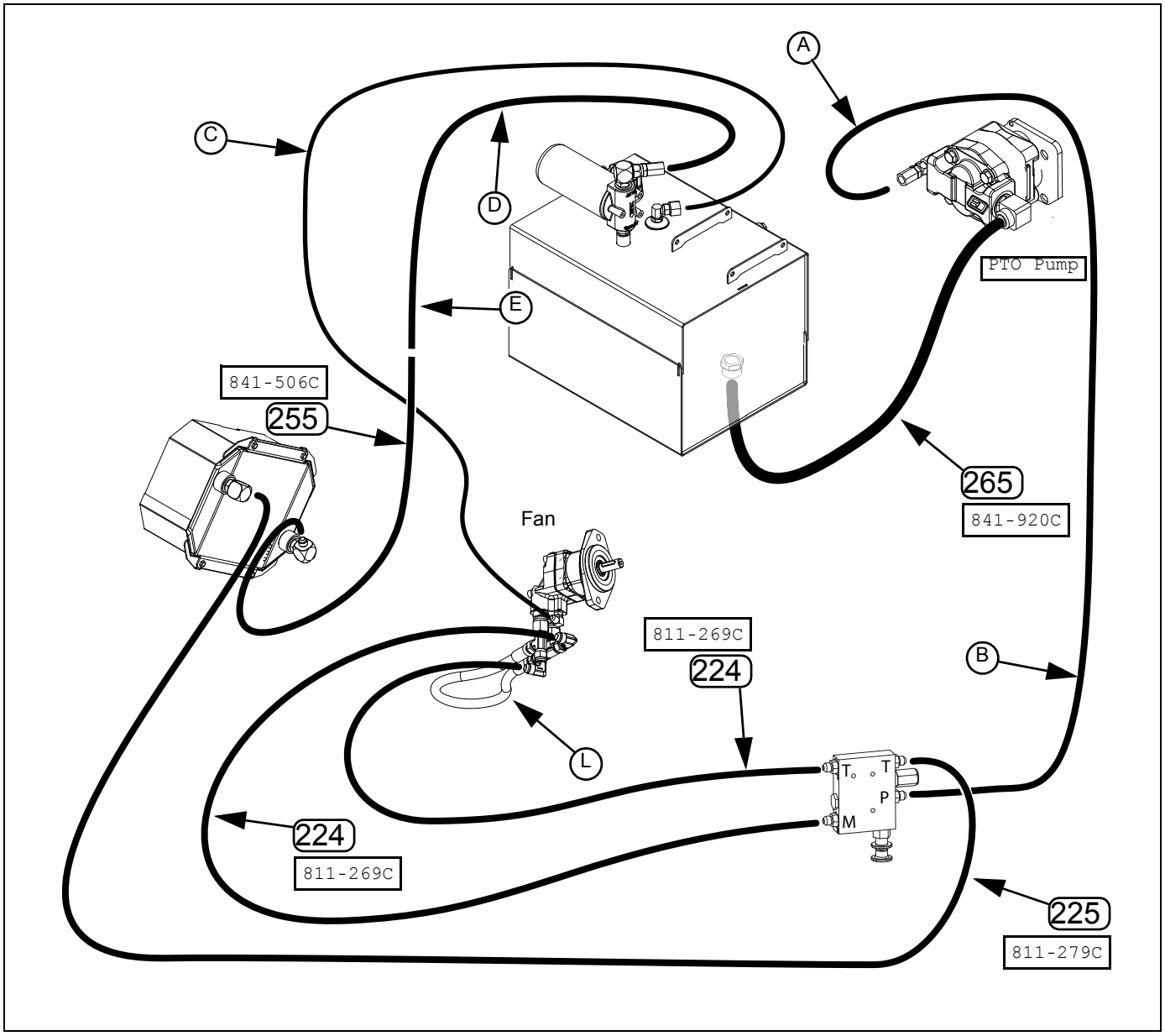

Figure 70: PTO Kit 401-938A Hose Routing
YP1630F

36346

401-938A Hose Diagram

Hydraulic Connections	Call-out	Part	Hose Description	Comments
Fan Pressure hose from hitch	Ⓐ, Ⓑ	Existing Hose		Remove hose handles. Disconnect from fan. Reconnect hitch end to PTO pump outlet. Reconnect rear end to flow control valve port P.
Fan Case Drain hose	Ⓒ	Existing Hose		Remove QD fittings at hitch end. Connect hitch end to reservoir case drain inlet.
Fan Return hose from hitch	Ⓓ, Ⓔ	Existing Hose		Remove hose handles. Disconnect from fan. Reconnect hitch end to reservoir inlet. Reconnect fan end to cooler outlet extension hose (255).
Fan motor loop	Ⓛ	Existing Hose		Left undisturbed.
Fan Return hose	(224)	811-269C	HH1/2R2 036 3/4FJIC	Connects fan outlet to flow control valve port T.
Fan Supply hose	(224)	811-269C	HH1/2R2 036 3/4FJIC	Connects flow control valve port M to fan inlet.
Cooler Inlet hose	(225)	811-279C	HH1/2R2 060 3/4FJIC	Connects flow control valve port T to cooler inlet.
Cooler Outlet hose	(255)	841-506C	HH1/2R2 030 3/4MJIC 3/4FJIC	Connects cooler outlet to fan end of existing fan return hose Ⓔ.
PTO Pump supply hose	(265)	841-920C	HH1 1/4R4 070 1 5/8FJIC	Connects reservoir outlet to PTO pump inlet.

401-939A Hose Diagram

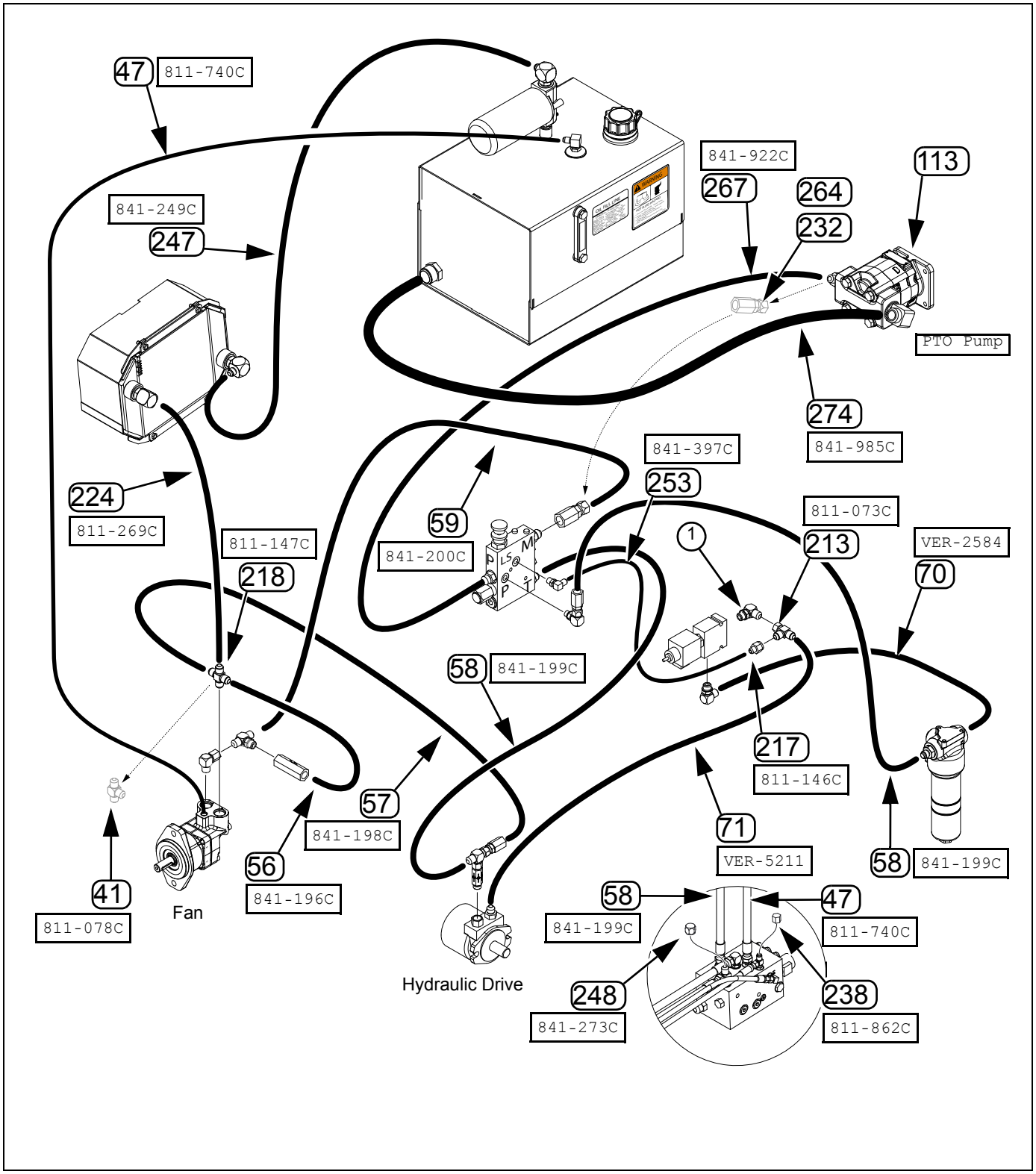

Figure 71: PTO Kit 401-939A Hose Routing
3PYP Finger-Pickup or Singulator Plus™ Hydraulic Drive

36347

401-939A Hose Diagram

Hydraulic Connections	Call-out	Part	Hose Description	Comments
Fan Return Tee	(41)	811-078C	TE 3/4MJIC	Remove. Replace with cross (218).
Fan Case Drain	(47)	811-740C	HH1/4R2 178 9/16FJIC	Disconnect from tee at steering control valve block. Replace with cap (238) at tee. Re-connect free end to reservoir case drain inlet.
Fan Loop	(56)	841-196C	HH1/2R2 024 3/4FJIC	Disconnect at removed tee (41). Re-connect at new cross (218).
Hydraulic Drive Return	(57)	841-198C	HH1/2R2 180 3/4FJIC 3/4MORB	Remove any hitch handle and fitting up to hose MORB. Disconnect at check valve elbow. Hose is re-connected to new cross (218) at fan motor.
Hydraulic Drive Supply	(57)	841-198C	HH1/2R2 180 3/4FJIC 3/4MORB	Disconnect hose at filter inlet. Remove from planter. Hose is not re-used.
Fan Return	(58)	841-199C	HH1/2R2 184 3/4FJIC	Disconnect from tee at steering control valve block. Replace with cap (248) at tee.
Hydraulic Drive Supply	(58)	841-199C	HH1/2R2 184 3/4FJIC	Flow control valve port P to filter inlet.
Fan Motor Inlet	(59)	841-200C	HH1/2R2 244 3/4FJIC 3/4MORB	Remove hitch handles and fittings up to hose MORB. Disconnect from fan. Reconnect from fittings (232) and (264) at flow control valve port M to fan motor inlet tee.
Filter-valve	(70)	VER-2584	VERIS HYD HS 8M3K-8FJX90S-8FJX	Left undisturbed.
Hydraulic Drive Pressure	(71)	VER-5211	VERIS HYD LINE STL .5 OD X.049	Disconnect at proportional valve elbow (1). Re-connect at adapter (217) on new tee (213) added there.
Hydraulic Drive sense tee	(213)	811-073C	TE 3/4MJIC 3/4MJIC 3/4FJIC	Add to existing elbow at proportional valve.
Sense adapter	(217)	811-146C	AD 3/4FJIC 9/16MJIC	Add to new tee (213).
Fan Outlet	(218)	811-147C	CR 3/4MJIC	Replaces original tee (41).
Cooler Inlet	(224)	811-269C	HH1/2R2 036 3/4FJIC	Fan motor outlet cross (218) to cooler inlet.
Pump Output	(232)	811-488C	AD 3/4FORB 3/4FORB	Remove this adapter from the new pump assembly (113). Relocate to valve port M.
Steering drain	(238)	811-862C	CP 9/16FJIC	Cap for hose removed at steering control valve.
Cooler Outlet	(247)	841-249C	HH1/2R2 108 3/4FJIC	Cooler outlet to reservoir inlet.
Steering return	(248)	841-273C	CP 3/4FJIC	Cap for hose removed at steering control valve.
Load Sense	(253)	841-397C	HH1/4R2 115 9/16FJIC	Proportional valve outlet tee (213) to control valve port LS.
Pump Output	(264)	841-919C	AD 7/8FJIC 3/4MORB	Remove this adapter from the new pump assembly (113). Relocate to valve port M.
Pump Outlet	(267)	841-922C	HH1/2R2 036 7/8FJIC 3/4FJIC	Pump outlet to control valve port P.
PTO Pump supply hose	(274)	841-985C	HH1 1/4R4 120 1 5/8FJIC	Reservoir outlet to PTO pump inlet.

401-940A Hose Diagram

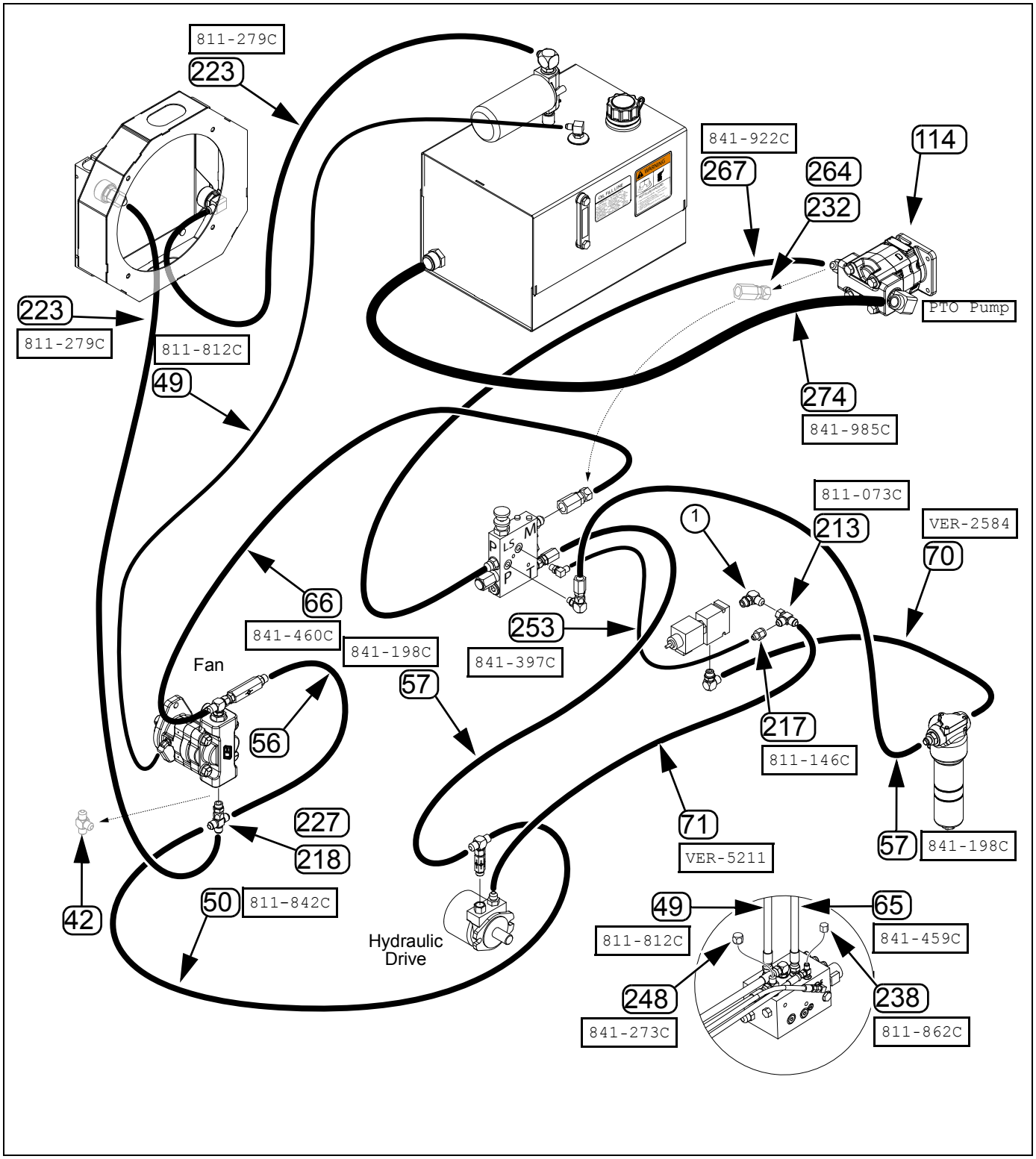

Figure 72: PTO Kit 401-940A Hose Routing
3PYP Air-Pro® Hydraulic Drive

36350

401-940A Hose Diagram

Hydraulic Connections	Call-out	Part	Hose Description	Comments
Fan Return Tee	42	811-080C	TE 3/4MJIC 3/4MORB 3/4MJIC	Remove. Replace with cross 218.
Fan Case Drain	49	811-812C	HH1/4R2 228 9/16FJIC	Disconnect from tee at steering control valve block. Replace with cap 238 at tee. Re-connect free end to reservoir case drain inlet.
Fan Return	50	811-842C	HH1/2R2 150 3/4FJIC	Disconnect from tee at steering control valve block. Replace with cap 248 at tee.
Fan Loop	56	841-196C	HH1/2R2 024 3/4FJIC	Disconnect at removed tee 42. Re-connect at new cross 218.
Hydraulic Drive Return	57	841-198C	HH1/2R2 180 3/4FJIC 3/4MORB	Remove any hitch handle and fitting up to hose MORB. Disconnect at check valve elbow. Hose is re-connected to new cross 218 at fan motor.
Hydraulic Drive Supply	57	841-198C	HH1/2R2 180 3/4FJIC 3/4MORB	Remove handle and fittings at hitch end, up to the MORB. Re-connect this end to flow control port P.
Fan Motor Inlet	66	841-460C	HH1/2R2 174 3/4MORB 3/4FJIC90	Remove hitch end handle and fittings up to MORB. Re-connect to fittings 232 and 264 at flow control valve port M.
Filter-valve	70	VER-2584	VERIS HYD HS 8M3K-8FJX90S-8FJX	Left undisturbed.
Hydraulic Drive Pressure	71	VER-5211	VERIS HYD LINE STL .5 OD X.049	Disconnect at proportional valve elbow ①. Re-connect at adapter 217 on new tee 213 added there.
Hydraulic Drive sense tee	213	811-073C	TE 3/4MJIC 3/4MJIC 3/4FJIC	Add to existing elbow at proportional valve.
Sense adapter	217	811-146C	AD 3/4FJIC 9/16MJIC	Add to new tee 213.
Fan Outlet	218	811-147C	CR 3/4MJIC	Replaces original tee 41.
Cooler Inlet	223	811-279C	HH1/2R2 060 3/4FJIC	Fan motor outlet cross 218 to cooler inlet.
Cooler Outlet	223	811-279C	HH1/2R2 060 3/4FJIC	Cooler outlet to reservoir inlet.
Fan Outlet	227	811-324C	AD 3/4MORB 3/4FJIC	Replaces original tee 41.
Pump Output	232	811-488C	AD 3/4FORB 3/4FORB	Remove this adapter from the new pump assembly 113. Relocate to valve port M.
Steering return	238	811-862C	CP 9/16FJIC	Cap for hose removed at steering control valve.
Steering drain	248	841-273C	CP 3/4FJIC	Cap for hose removed at steering control valve.
Load Sense	253	841-397C	HH1/4R2 115 9/16FJIC	Proportional valve outlet tee 213 to control valve port LS.
Pump Output	264	841-919C	AD 7/8FJIC 3/4MORB	Remove this adapter from the new pump assembly 113. Relocate to valve port M.
Pump Outlet	267	841-922C	HH1/2R2 036 7/8FJIC 3/4FJIC	Pump outlet to control valve port P.
PTO Pump supply hose	274	841-985C	HH1 1/4R4 120 1 5/8FJIC	Reservoir outlet to PTO pump inlet.

401-941A Hose Diagram

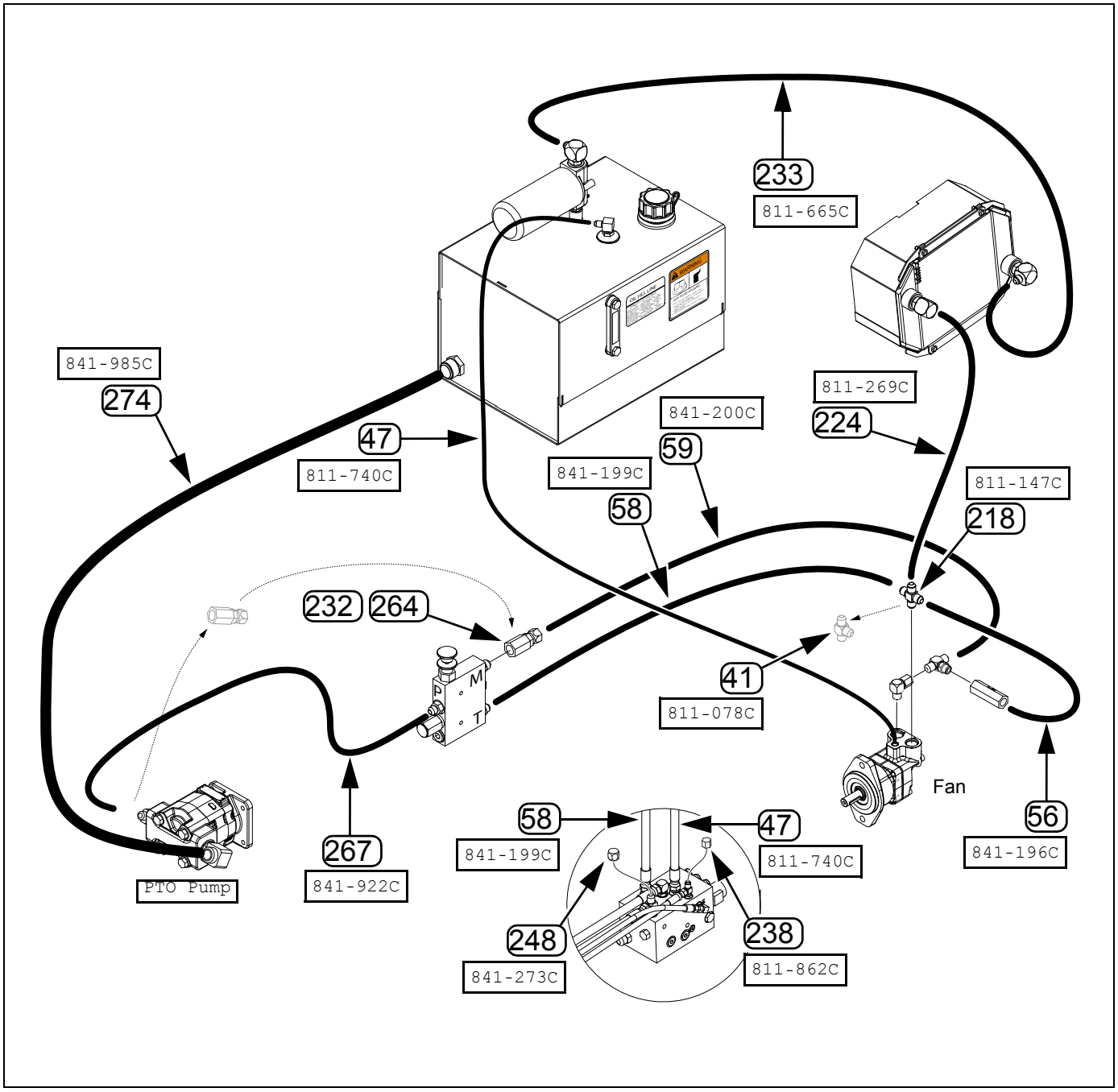

36352

Figure 73: PTO Kit 401-941A Hose Routing
3PYP Finger-Pickup or Singulator Plus™ Ground Drive
or Hydraulic Drive models using PTO only for Fan

401-941A Hose Diagram

Hydraulic Connections	Call-out	Part	Hose Description	Comments
Fan Return Tee	41	811-078C	TE 3/4MJIC	Remove. Replace with cross 218.
Fan Case Drain	47	811-740C	HH1/4R2 178 9/16FJIC	Disconnect from tee at steering control valve block. Replace with cap 238 at tee. Re-connect hitch end to reservoir case drain inlet.
Fan Return	58	841-199C	HH1/2R2 184 3/4FJIC	Disconnect from tee at steering control valve block. Replace with cap 248 at tee. Disconnect from tee 41 at fan return. Re-connect hitch end to flow control valve Port T. Re-connect fan end to new cross 218 at fan return.
Fan Pressure	59	841-200C	HH1/2R2 244 3/4FJIC 3/4MORB	Remove hitch handles and fittings up to hose MORB. Re-connect hitch end to flow control valve Port M.
Fan return	218	811-147C	CR 3/4MJIC	Replace tee 41 at fan motor return.
Cooler Inlet hose	224	811-269C	HH1/2R2 036 3/4FJIC	Connect from fan return cross 218 to cooler inlet.
Pump Output	232	811-488C	AD 3/4FORB 3/4FORB	Remove this adapter from the new pump assembly 113. Relocate to valve port M.
Cooler Outlet	233	811-665C	HH1/2R2 208 3/4FJIC	Connect from cooler outlet to reservoir return inlet.
Steering drain	238	811-862C	CP 9/16FJIC	Cap for hose removed at steering control valve.
Steering return	248	841-273C	CP 3/4FJIC	Cap for hose removed at steering control valve.
Pump Output	264	841-919C	AD 7/8FJIC 3/4MORB	Remove this adapter from the new pump assembly 113. Relocate to valve port M.
Pump Output	267	841-922C	HH1/2R2 036 7/8FJIC 3/4FJIC	Connect pump outlet (w/o fittings 232, 264) to flow control valve Port P
PTO Pump Inlet	274	841-985C	HH1 1/4R4 120 1 5/8FJIC	Connect from reservoir outlet to pump inlet.

401-942A Hose Diagram

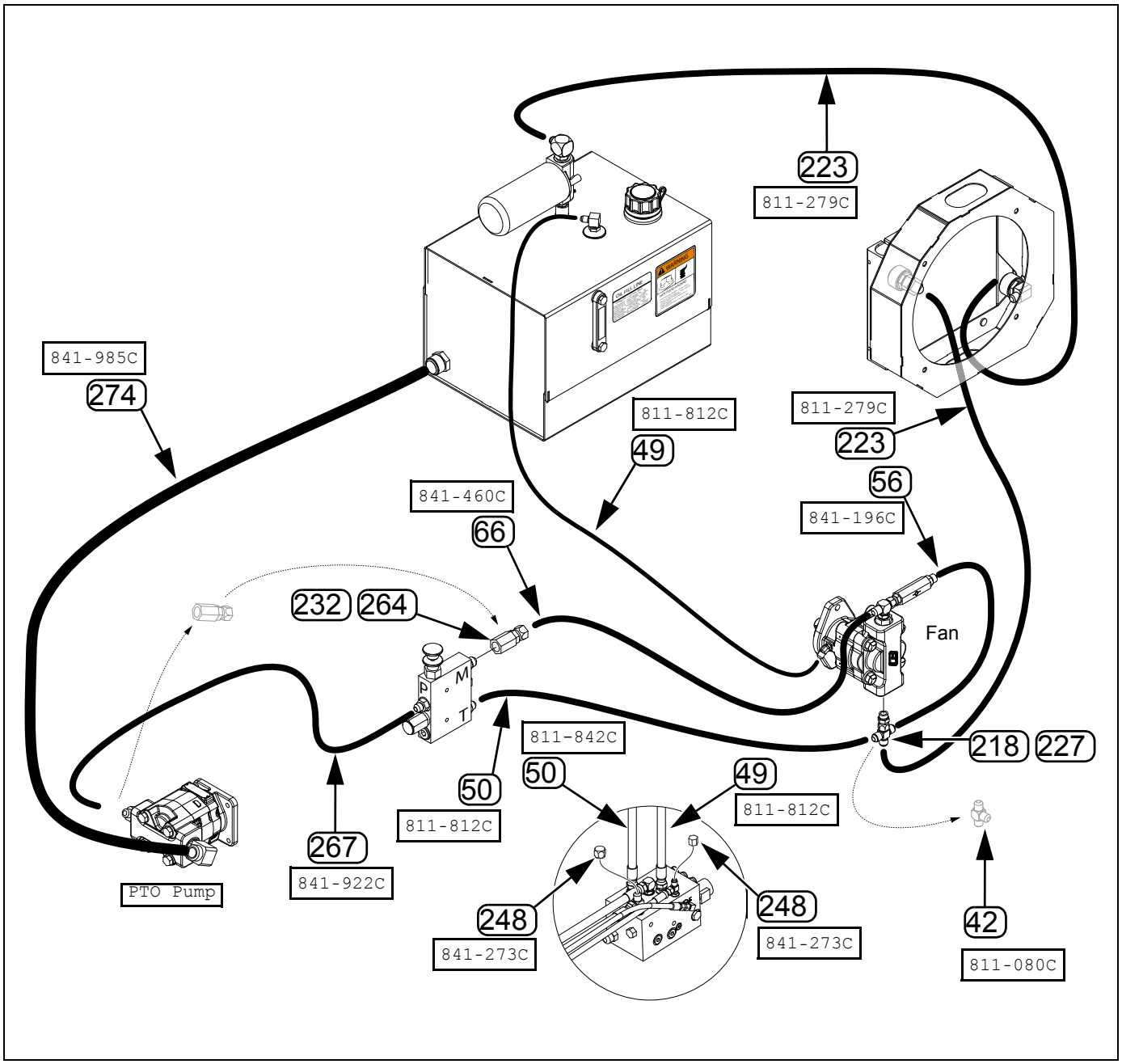

Figure 74: PTO Kit 401-942A Hose Routing
3PYPA Air-Pro® Ground Drive
or 3PYPA Air-Pro® Hydraulic Drive models using PTO only for Fan

36353

401-942A Hose Diagram

Hydraulic Connections	Call-out	Part	Hose Description	Comments
Fan Return Tee	42	811-080C	TE 3/4MJIC 3/4MORB 3/4MJIC	Remove. Replace with cross 218.
Fan Case Drain	49	811-812C	HH1/4R2 228 9/16FJIC	Disconnect from tee at steering control valve block. Replace with cap 248 at tee. Re-connect hitch end to reservoir case drain inlet.
Fan Return	50	811-842C	HH1/2R2 150 3/4FJIC	Re-connect hitch end to flow control valve Port T. Re-connect fan end to new cross 218 at fan return.
Fan Return	65	841-459C	HH1/4R2 162 9/16FJIC	Disconnect from tee at steering control valve block. Replace with cap 238 at tee. Disconnect from tee 42 at fan return. Hose is not reused.
Fan Pressure	66	841-460C	HH1/2R2 174 3/4MORB 3/4FJIC90	Remove hitch handles and fittings up to hose MORB. Re-connect hitch end to valve port M.
Fan return	218	811-147C	CR 3/4MJIC	Replace tee 41 at fan motor return.
Cooler Inlet hose	223	811-279C	HH1/2R2 060 3/4FJIC	Connect from fan return cross 218 to cooler inlet.
Cooler Outlet	223	811-279C	HH1/2R2 060 3/4FJIC	Connect from cooler outlet to reservoir return inlet.
Pump Output	232	811-488C	AD 3/4FORB 3/4FORB	Remove this adapter from the new pump assembly 113. Relocate to valve port M.
Steering drain	248	841-273C	CP 3/4FJIC	Cap for hose removed at steering control valve.
Steering return	248	841-273C	CP 3/4FJIC	Cap for hose removed at steering control valve.
Pump Output	264	841-919C	AD 7/8FJIC 3/4MORB	Remove this adapter from the new pump assembly 113. Relocate to valve port M.
PTO Pump Inlet	274	841-985C	HH1 1/4R4 120 1 5/8FJIC	Connect from reservoir outlet to pump inlet.

401-943A Hose Diagram

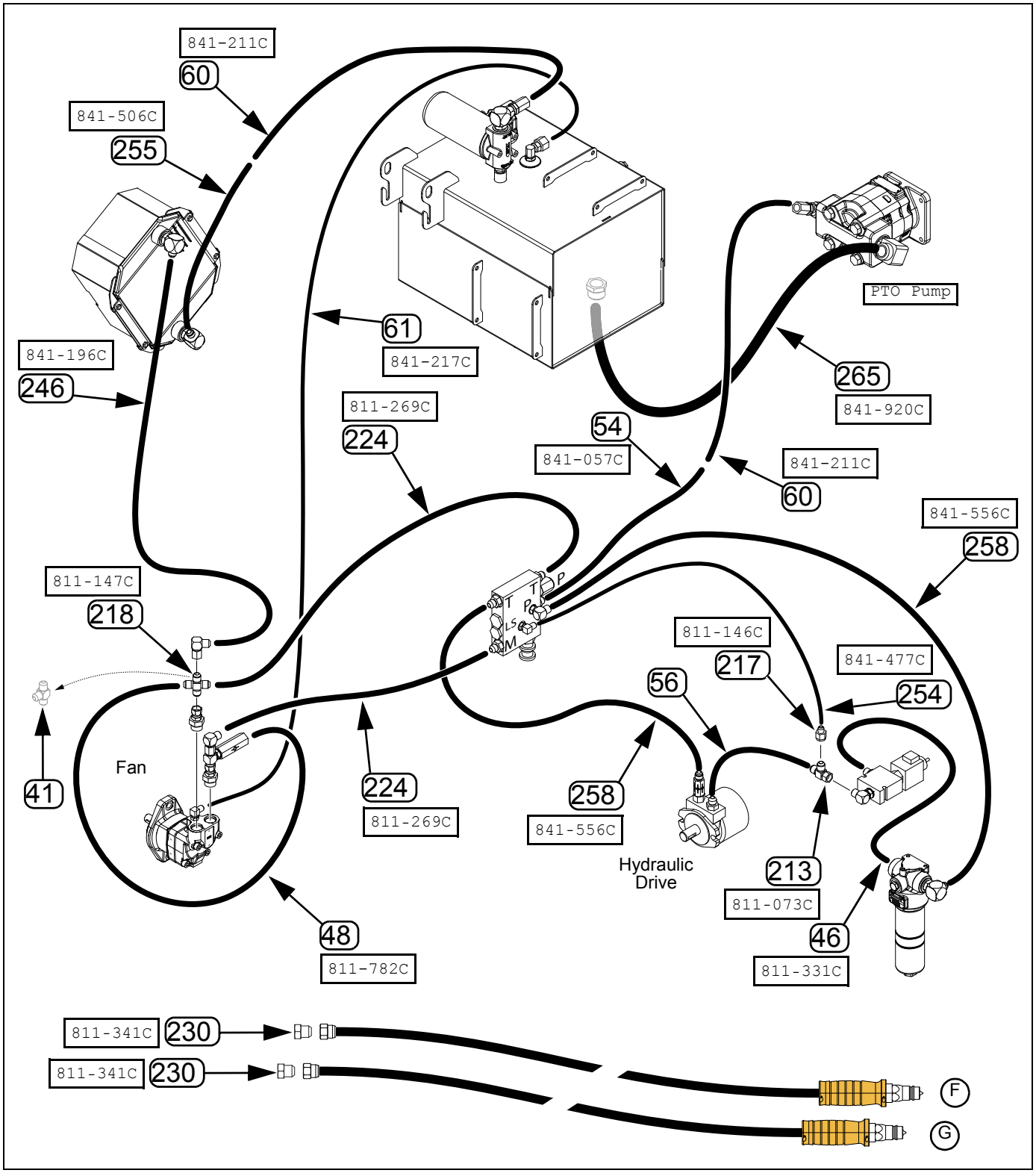

Figure 75: PTO Kit 401-943A Hose Routing
YP2425 Finger-Pickup or Singulator Plus™ Hydraulic Drive

36354

401-943A Hose Diagram

Hydraulic Connections	Call-out	Part	Hose Description	Comments
Hydraulic Drive Pressure hose from hitch	Ⓕ	Existing hose(s)		Disconnect Ⓕ at drive motor check valve. Hose is not reused, and is capped with plug 230.
Hydraulic Drive Return hose to hitch	Ⓖ	Existing hose(s)		Disconnect Ⓖ at filter elbow. Hose is not reused, and is capped with plug 230.
Fan Return	41	811-078C	TE 3/4MJIC	Remove tee 41 at fan return fittings (it is not reused). Replace with new cross 218.
Filter to Proportional Valve	46	811-331C	HH1/2R2 020 3/4FJIC	Left in place.
Fan Bypass Loop	48	811-782C	HH1/2R1 024 3/4FJIC 3/4MORB	Disconnect one end at existing tee 41. Reconnect at same circuit point with new cross 218.
Fan Pressure Hose at Fan	54	841-057C	HH1/2R2 304 3/4FJIC	Disconnect fan end at motor inlet elbow. Reconnect to flow control valve block end Port P.
Fan Return Hose at fan	54	841-057C	HH1/2R2 304 3/4FJIC	Disconnect fan end of hose.Reconnect to new hose 255 from cooler outlet.
Hydraulic Drive Motor supply	56	841-196C	HH1/2R2 024 3/4FJIC	Disconnect from existing elbow at proportional valve. Reconnect to new tee 213 added there.
Fan Pressure Hose at Fan	60	841-211C	HH1/2R2 432 3/4MORB 3/4FJIC	Disconnect fan end at motor inlet elbow. Reconnect to flow control valve block end Port P.
Fan Pressure hose from hitch.	60	841-211C	HH1/2R2 432 3/4MORB 3/4FJIC	Remove hitch end fittings up to hose MORB. Fittings are not reused. Reconnect hitch end to pump outlet.
Fan Return Hose at Hitch	60	841-211C	HH1/2R2 432 3/4MORB 3/4FJIC	Remove hitch end fittings up to hose MORB. Fittings are not reused. Reconnect hitch end to reservoir inlet.
Fan Case Drain hose	61	841-217C	HH1/4R2 434 9/16FJIC 9/16MORB	Remove hitch end fittings up to hose MORB. Fittings are not reused. Reconnect hitch end to reservoir case drain inlet.
Hydraulic Drive Sense Tee	213	811-073C	TE 3/4MJIC 3/4MJIC 3/4FJIC	Add to existing elbow at proportional valve.
Sense adapter	217	811-146C	AD 3/4FJIC 9/16MJIC	Add to new tee 213.
Fan Outlet	218	811-147C	CR 3/4MJIC	Replace existing tee 41 with new cross 218.
Fan Pressure	224	811-269C	HH1/2R2 036 3/4FJIC	Connect fan inlet elbow to flow control valve Port M.
Fan Return	224	811-269C	HH1/2R2 036 3/4FJIC	Connect from new return cross 218 to flow control valve Port T.
Hitch hose plug	230	811-341C	PL 3/4MJIC	Cap motor ends of hydraulic drive hoses Ⓕ and Ⓖ with plugs 230.
Cooler Inlet hose	246	841-196C	HH1/2R2 024 3/4FJIC	Connect elbow at fan outlet to cooler inlet.
Hydraulic Drive sense hose	254	841-477C	HH1/4R2 140 9/16FJIC	Connect sense adapter 217 to flow control valve Port LS.
Hydraulic drive return	258	841-556C	HH1/2R2 144 3/4FJIC	Connect motor outlet check valve to either flow control valve Port T.
Hydraulic drive supply	258	841-556C	HH1/2R2 144 3/4FJIC	Connect flow control valve Port P (at elbow) to filter inlet.
PTO Pump supply hose	265	841-920C	HH1 1/4R4 070 1 5/8FJIC	Connect reservoir outlet (on bottom) to pump inlet.

401-944A Hose Diagram

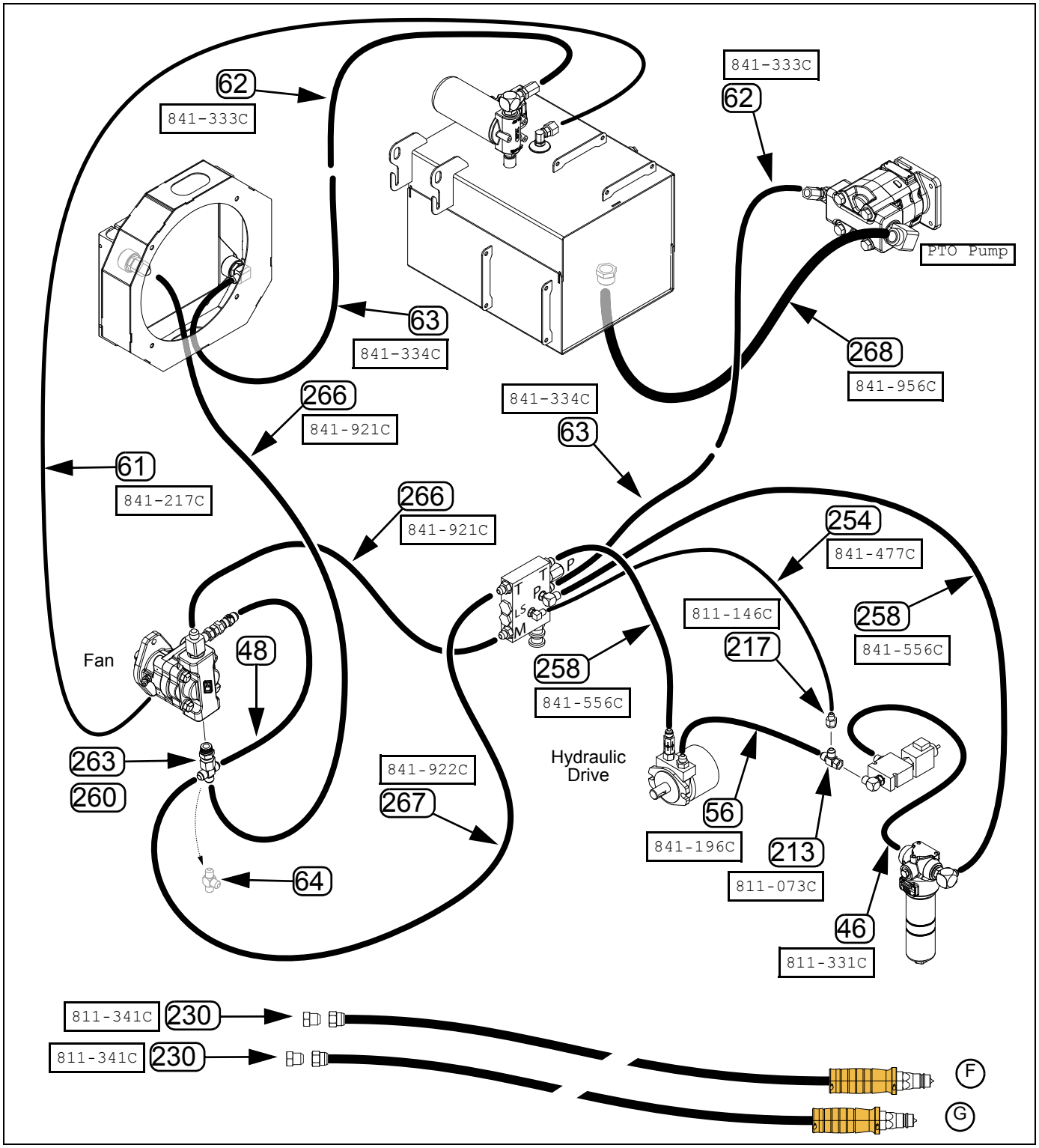

Figure 76: PTO Kit 401-944A Hose Routing
YP2425A Air-Pro® Hydraulic Drive

36362

401-944A Hose Diagram

Hydraulic Connections	Call-out	Part	Hose Description	Comments
Hydraulic Drive Pressure hose from hitch	Ⓕ	Existing hoses		Disconnect Ⓕ at filter elbow. Hose is not reused, and is capped with plug 230.
Hydraulic Drive Return hose to hitch	Ⓖ	Existing hoses		Disconnect Ⓖ at filter elbow. Hose is not reused, and is capped with plug 230.
Filter to Proportional Valve	46	811-331C	HH1/2R2 020 3/4FJIC	Left in place.
Fan Bypass Loop	48	811-782C	HH1/2R1 024 3/4FJIC 3/4MORB	Disconnect one end at existing tee 64. Reconnect at same circuit point with new cross 260.
Hydraulic Drive Motor inlet	56	841-196C	HH1/2R2 024 3/4FJIC	Disconnect source end from existing proportional valve elbow. Reconnect to new tee 213.
Fan Case Drain hose	61	841-217C	HH1/4R2 434 9/16FJIC 9/16MORB	Remove hitch end fittings up to hose MORB. Fittings are not reused. Reconnect hitch end to reservoir case drain inlet.
Fan Pressure hoses from hitch.	62	841-333C	HH5/8R2 432 3/4MORB 7/8FJIC	Remove hitch end fittings up to hose MORB. Fittings are not reused. Reconnect hitch end to pump outlet.
Fan Return Hose at Hitch	62	841-333C	HH5/8R2 432 3/4MORB 7/8FJIC	Remove hitch end fittings up to hose MORB. Fittings are not reused. Reconnect hitch end to reservoir inlet.
Fan Pressure Hose at Fan	63	841-334C	HH5/8R2 312 7/8FJIC	Disconnect fan end at motor inlet elbow. Reconnect to flow control valve block end Port P
Fan Return Hose at fan	63	841-334C	HH5/8R2 312 7/8FJIC	Disconnect fan end of hose.Reconnect to cooler outlet.
Fan Return tee	64	841-337C	TE 1 1/16MORB 7/8MJIC 7/8MJIC	Remove tee 64 at fan return fittings (it is not reused). Replace with new cross 260 and adapter 263.
Hydraulic Drive Sense Tee	213	811-073C	TE 3/4MJIC 3/4MJIC 3/4FJIC	Add to existing elbow at proportional valve.
Sense adapter	217	811-146C	AD 3/4FJIC 9/16MJIC	Add to new tee 213.
Hitch hose plug	230	811-341C	PL 3/4MJIC	Cap hitch pressure hoses Ⓕ and Ⓖ with plug 230.
Hydraulic Drive sense hose	254	841-477C	HH1/4R2 140 9/16FJIC	Connect sense adapter 217 to flow control valve Port LS.
Hydraulic drive return	258	841-556C	HH1/2R2 144 3/4FJIC	Connect motor outlet check valve to either flow control valve Port T.
Hydraulic drive supply	258	841-556C	HH1/2R2 144 3/4FJIC	Connect flow control valve Port P (at elbow) to filter inlet.
Fan Outlet	260	841-915C	CR 7/8MJIC	Replace existing tee 64 with new cross 260 and adapter 263.
Fan Outlet	263.	841-918C	AD 1 1/16MORB 7/8FJIC	Replace existing tee 64 with new cross 260 and adapter 263.
Fan Pressure	266	841-921C	HH5/8R2 032 7/8FJIC	Connect fan inlet tee to flow control valve Port M.
Fan Return	266	841-921C	HH5/8R2 032 7/8FJIC	Connect fan outlet 260 to cooler inlet.
Valve Return	267	841-922C	HH1/2R2 036 7/8FJIC 3/4FJIC	Connect valve Port T to fan outlet cross 260.
PTO Pump supply hose	268	841-956C	HH1 1/2R4 070 1 7/8FJIC	Connect reservoir outlet (on bottom) to pump inlet.

11 Hose Diagram

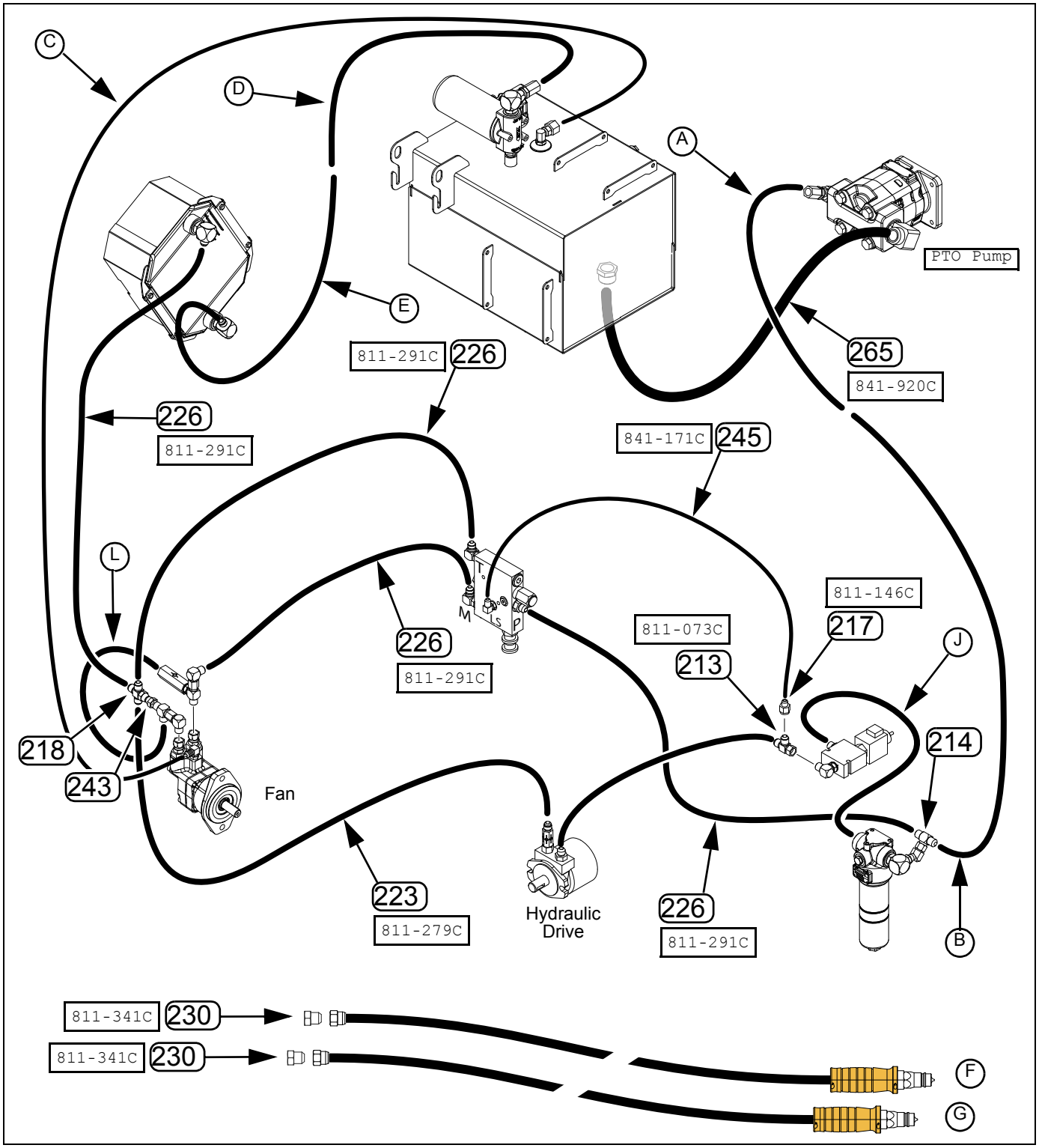

Figure 77: PTO Kit 401-945A Hose Routing
YP3010HDP, YP3020P, YP3025, YP4010HDP, YP4020, YP4025

11 Hose Diagram

Hydraulic Connections	Call-out	Part	Hose Description	Comments
Fan Pressure hose from hitch	Ⓐ, Ⓑ	Existing hose		Remove hose handles. Disconnect from fan. Reconnect hitch end to PTO pump outlet. Reconnect fan end to filter inlet tee.
Fan Case Drain hose	Ⓒ	Existing hose		Remove QD fittings at hitch end. Connect hitch end to reservoir case drain inlet.
Fan Return hose from hitch	Ⓓ, Ⓔ	Existing hose		Remove hose handles. Disconnect from fan. Reconnect hitch end to reservoir inlet. Reconnect rear end to cooler outlet.
Hydraulic Drive Pressure hose from hitch	Ⓕ	Existing hoses		Disconnect Ⓕ at filter elbow. Hose is not reused, and is capped with plug 230.
Filter to Proportional Valve	Ⓙ	Existing hose		Leave in place.
Hydraulic Drive Return hose to hitch	Ⓖ	Existing hoses		Disconnect Ⓖ at filter elbow. Hose is not reused, and is capped with plug 230.
Fan Bypass Loop	Ⓛ	Existing hose		Leave in place.
Proportional Valve Outlet tee	213	811-073C	TE 3/4MJIC 3/4MJIC 3/4FJIC	Add to existing elbow at proportional valve.
Filter Inlet Tee	214	811-079C	TE 3/4FJIC 3/4MJIC 3/4MJIC	Add to existing elbow at filter.
Sense adapter	217	811-146C	AD 3/4FJIC 9/16MJIC	Add to new tee 213.
Fan Return Cross	218	811-147C	CR 3/4MJIC	Add to new adapter 243.
Hydraulic Drive Motor Return hose	223	811-279C	HH1/2R2 060 3/4FJIC	Connect the motor check valve to the new cross 218 at the fan.
Fan Supply hose	226	811-291C	HH1/2R2 072 3/4FJIC	Connect flow control valve Port M to the existing elbow at the fan motor inlet.
Flow Control Return hose	226	811-291C	HH1/2R2 072 3/4FJIC	Connect flow control valve Port T to new cross 218 at the fan.
Flow Control Valve Supply hose	226	811-291C	HH1/2R2 072 3/4FJIC	Connect filter inlet tee 214 to flow control valve Port P.
Load Sense hose	245	841-171C	HH1/4R2 075 9/16FJIC	Connect between sense adapter 217 and flow control valve Port LS.
Hitch hose plug	230	811-341C	PL 3/4MJIC	Cap hitch pressure hoses Ⓕ and Ⓖ with plugs 230.
Fan Return adapter	243	841-066C	AD 3/4FJIC 3/4FJIC UNION	Add to existing tee at fan return port.
Fan Return to Cooler hose	246	841-196C	HH1/2R2 024 3/4FJIC	Connect the new cross 218 at the fan to the cooler inlet.
Pump Supply hose	265	841-920C	HH1 1/4R4 070 1 5/8FJIC	Connect the reservoir outlet to the pump inlet.

401-946A Hose Diagram

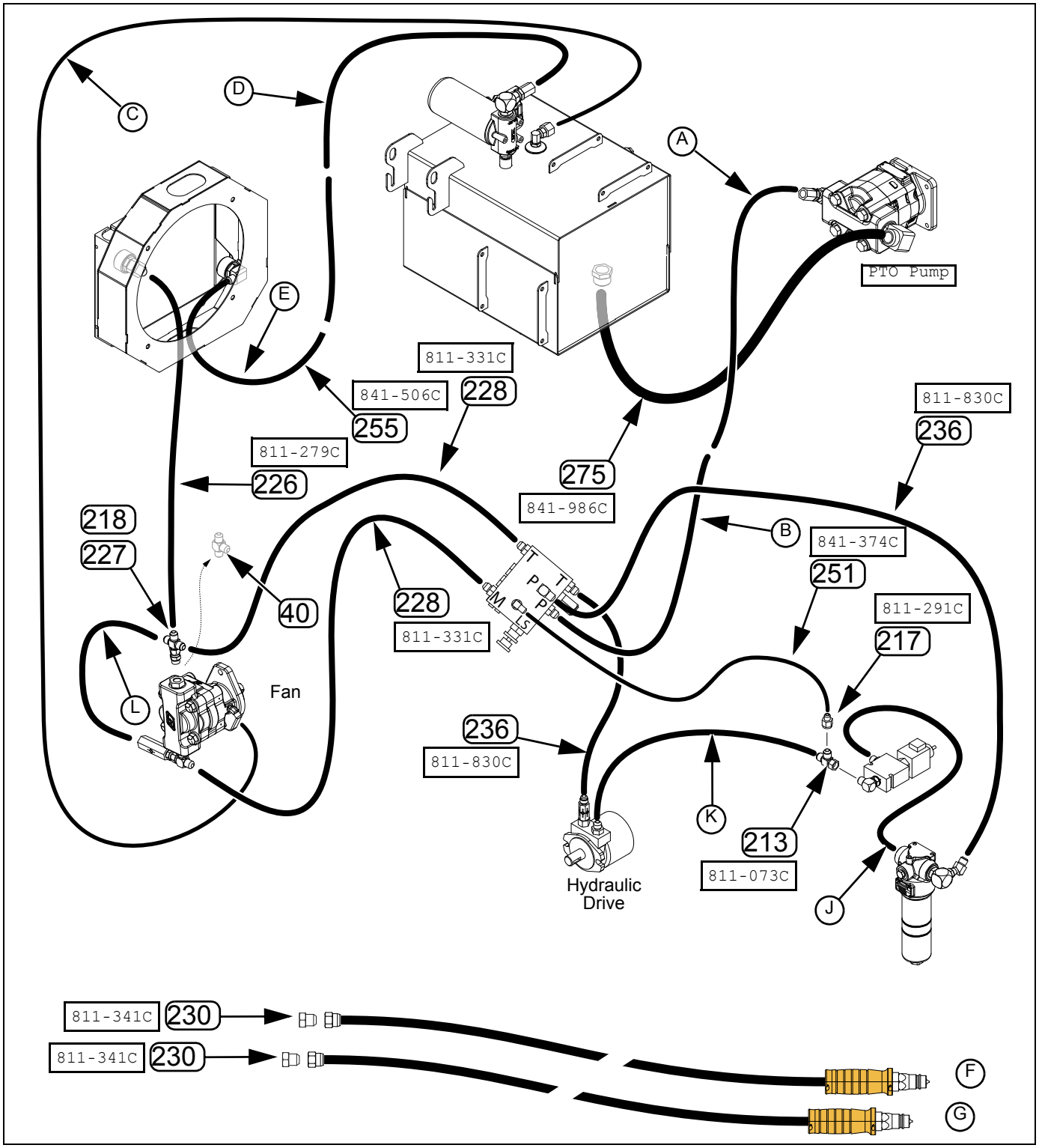

Figure 78: PTO Kit 401-946A Hose Routing
YP3025A, YP4025A

36372

401-946A Hose Diagram

Hydraulic Connections	Call-out	Part	Hose Description	Comments
Fan Pressure hose from hitch	Ⓐ, Ⓑ	Existing hoses		Remove hose handles. Disconnect from fan. Reconnect hitch end to PTO pump outlet. Reconnect fan end to flow control valve edge Port P
Fan Case Drain hose	Ⓒ	Existing hoses		Remove QD fittings at hitch end. Connect hitch end to reservoir case drain inlet.
Fan Return hose from hitch	Ⓓ, Ⓔ	Existing hoses		Remove hose handles. Disconnect from fan. Reconnect hitch end to reservoir inlet. Reconnect rear end to new hose 255 from cooler outlet.
Hydraulic Drive Pressure hose from hitch	Ⓕ	Existing hoses		Disconnect Ⓕ at filter elbow. Hose is not reused, and is capped with plug 230.
Filter to Proportional Valve	Ⓙ	Existing hose		Leave in place.
Hydraulic Drive Return hose to hitch	Ⓖ	Existing hoses		Disconnect Ⓖ at filter elbow. Hose is not reused, and is capped with plug 230.
Fan Bypass Loop	Ⓛ	Existing hoses		Disconnect at existing tee 40. Reconnect at new cross 218.
Fan Return Tee	40	811-077C	TE 3/4MORB 3/4MJIC 3/4MJIC	Remove. Not reused. Replace with new cross 218.
Proportional Valve Outlet tee	213	811-073C	TE 3/4MJIC 3/4MJIC 3/4FJIC	Add to existing elbow at proportional valve.
Sense adapter	217	811-146C	AD 3/4FJIC 9/16MJIC	Add to new tee 213.
Fan Return Cross	218	811-147C	CR 3/4MJIC	Add to new adapter 227
Fan Return to Cooler hose	226	811-279C	HH1/2R2 060 3/4FJIC	Connect the new cross 218 at the fan to the cooler inlet.
Fan Return adapter	227	811-324C	AD 3/4MORB 3/4FJIC	Add to new fan return port (replacing removed tee 40).
Fan Supply hose	228	811-331C	HH1/2R2 020 3/4FJIC	Connect flow control valve Port M to the existing tee at the fan motor inlet.
Flow Control Return hose	228	811-331C	HH1/2R2 020 3/4FJIC	Connect flow control valve Port T to new cross 218 at the fan.
Hitch hose plug	230	811-341C	PL 3/4MJIC	Cap hitch pressure hoses Ⓕ and Ⓖ with plugs 230.
Hydraulic Drive Motor Return hose	236	811-830C	HH1/2R2 084 3/4FJIC	Connect the motor check valve to flow control valve Port T.
Hydraulic Drive Supply hose	236	811-830C	HH1/2R2 084 3/4FJIC	Connect flow control valve face Port P to filter inlet.
Load Sense hose	251	841-374C	HH1/4R2 085 9/16FJIC	Connect between sense adapter 217 and flow control valve Port LS.
Cooler Outlet hose	255	841-506C	HH1/2R2 030 3/4MJIC 3/4FJIC	Connect cooler outlet to existing fan return hose Ⓔ.
Pump Supply hose	275	841-986C	HH1 1/4R4 080 1 5/8FJIC	Connect the reservoir outlet to the pump inlet.

401-951A Hose Diagram

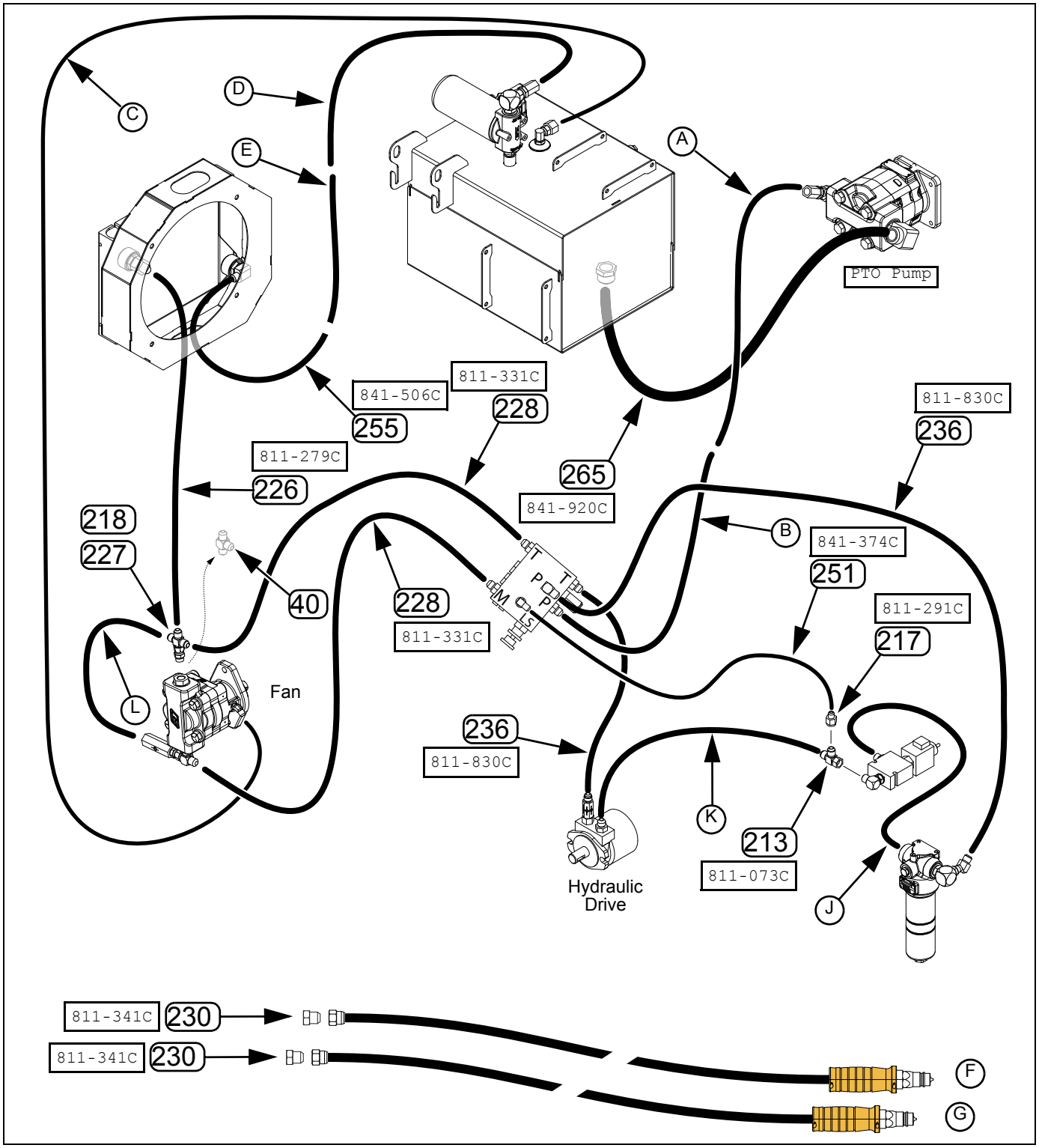

Figure 79: PTO Kit Hose Routing
YP4425A

36372

401-951A Hose Diagram

Hydraulic Connections	Call-out	Part	Hose Description	Comments
Fan Pressure hose from hitch	Ⓐ, Ⓑ	Existing hose(s)		Remove hose handles. Disconnect from fan. Reconnect hitch end to PTO pump outlet. Reconnect fan end to flow control valve edge Port P
Fan Case Drain hose	Ⓒ	Existing hose(s)		Remove QD fittings at hitch end. Connect hitch end to reservoir case drain inlet.
Fan Return hose from hitch	Ⓓ, Ⓔ	Existing hose(s)		Remove hose handles. Disconnect from fan. Reconnect hitch end to reservoir inlet. Reconnect rear end to new hose (255) from cooler outlet.
Hydraulic Drive Pressure hose from hitch	Ⓕ	Existing hose(s)		Disconnect Ⓕ at filter elbow. Hose is not reused, and is capped with plug (230).
Filter to Proportional Valve	Ⓙ	Existing hose(s)		Leave in place.
Hydraulic Drive Return hose to hitch	Ⓖ	Existing hose(s)		Disconnect Ⓖ at filter elbow. Hose is not reused, and is capped with plug (230).
Fan Bypass Loop	Ⓛ	Existing hose		Disconnect at existing tee (40). Reconnect at new cross (218).
Fan Return Tee	(40)	811-077C	TE 3/4MORB 3/4MJIC 3/4MJIC	Remove. Not reused. Replace with new cross (218).
Proportional Valve Outlet tee	(213)	811-073C	TE 3/4MJIC 3/4MJIC 3/4FJIC	Add to existing elbow at proportional valve.
Sense adapter	(217)	811-146C	AD 3/4FJIC 9/16MJIC	Add to new tee (213).
Fan Return Cross	(218)	811-147C	CR 3/4MJIC	Add to new adapter (227)
Fan Return to Cooler hose	(226)	811-279C	HH1/2R2 060 3/4FJIC	Connect the new cross (218) at the fan to the cooler inlet.
Fan Return adapter	(227)	811-324C	AD 3/4MORB 3/4FJIC	Add to new fan return port (replacing removed tee (40)).
Fan Supply hose	(228)	811-331C	HH1/2R2 020 3/4FJIC	Connect flow control valve Port M to the existing tee at the fan motor inlet.
Flow Control Return hose	(228)	811-331C	HH1/2R2 020 3/4FJIC	Connect flow control valve Port T to new cross (218) at the fan.
Hitch hose plug	(230)	811-341C	PL 3/4MJIC	Cap hitch pressure hose Ⓕ and Ⓖ with plugs (230).
Hydraulic Drive Motor Return hose	(236)	811-830C	HH1/2R2 084 3/4FJIC	Connect the motor check valve to flow control valve Port T.
Hydraulic Drive Supply hose	(236)	811-830C	HH1/2R2 084 3/4FJIC	Connect flow control valve face Port P to filter inlet.
Load Sense hose	(251)	841-374C	HH1/4R2 085 9/16FJIC	Connect between sense adapter (217) and flow control valve Port LS.
Cooler Outlet hose	(255)	841-506C	HH1/2R2 030 3/4MJIC 3/4FJIC	Connect cooler outlet to existing fan return hose Ⓔ.
Pump Supply hose	(265)	841-920C	HH1 1/4R4 070 1 5/8FJIC	Connect the reservoir outlet to the pump inlet.

411-014A Hose Diagram

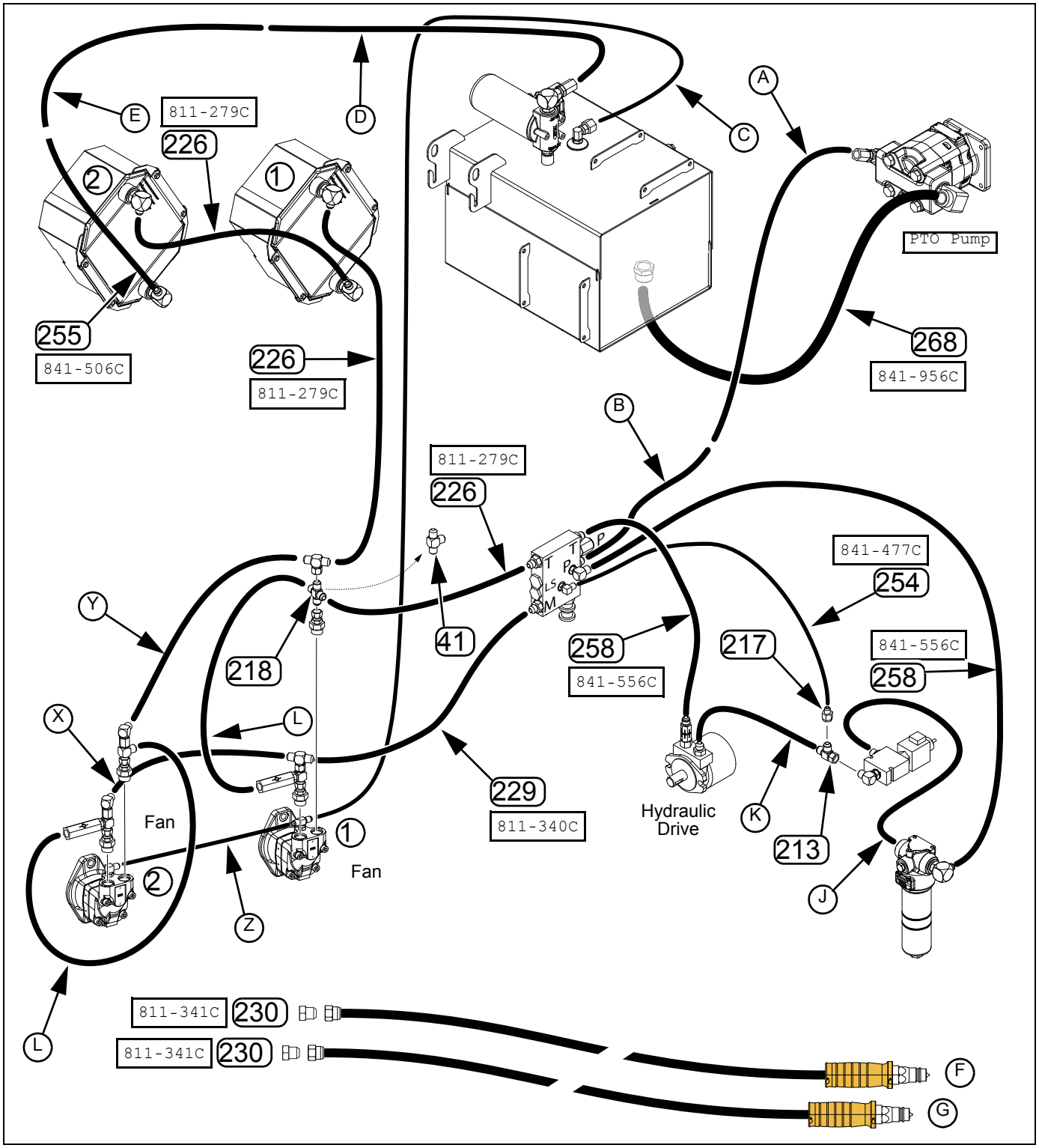

Figure 80: PTO Kit 411-014A Hose Routing
YP2425F

36373

411-014A Hose Diagram

Hydraulic Connections	Call-out	Part	Hose Description	Comments
Fans Pressure hose from hitch	Ⓐ, Ⓑ	Existing Hose		Remove hose handles. Disconnect from fan ①. Reconnect hitch end to PTO pump outlet. Reconnect fan end to flow control valve edge Port P
Fans Case Drain hose	Ⓒ	Existing Hose		Remove QD fittings at hitch end. Connect hitch end to reservoir case drain inlet.
Fans Return hose from hitch	Ⓓ, Ⓔ	Existing Hose		Remove hose handles. Disconnect from fan ①. Reconnect hitch end to reservoir inlet. Reconnect rear end to new hose 255 from cooler ② outlet.
Drive Pressure hose from hitch	Ⓕ	Existing hoses		Disconnect Ⓕ at filter elbow. Hose is not reused, and is capped with plug 230.
Filter to Proportional Valve	Ⓙ	Existing hose left in place		
Drive Motor Press.	Ⓚ	Existing hose		Disconnect at existing proportional valve outlet elbow. Reconnect at new tee 213.
Drive Return hose to hitch	Ⓖ	Existing hoses		Disconnect Ⓖ at filter elbow. Hose is not reused, and is capped with plug 230.
Fan Loop ①	Ⓛ①	Existing hose		Disconnect at existing tee 41. Reconnect at new cross 218.
Fan Loop ②	Ⓛ②	Existing hose left in place		Forward Fan Ⓛ① is a re-connection.
Fan-to-Fan Press.	Ⓧ	Existing hose left in place		
Fan-to-Fan Return	Ⓨ	Existing hose left in place		
Fan-to-Fan Drain	Ⓩ	Existing hose left in place		
Fan Return Tee	40	811-077C	TE 3/4MORB 3/4MJIC 3/4MJIC	Remove. Not reused. Replace with new cross 218.
Proportional Valve Outlet tee	213	811-073C	TE 3/4MJIC 3/4MJIC 3/4FJIC	Add to existing elbow at proportional valve.
Sense adapter	217	811-146C	AD 3/4FJIC 9/16MJIC	Add to new tee 213.
Fan Return Cross	218	811-147C	CR 3/4MJIC	Replace existing tee 41.
Fan Return to Cooler hose	226	811-279C	HH1/2R2 060 3/4FJIC	Connect the new cross 218 at the fan to the cooler ① inlet.
Flow Control Return hose	226	811-279C	HH1/2R2 060 3/4FJIC	Connect flow control valve Port T to new cross 218 at fan ①.
Fans Supply hose	229	811-340C	HH1/2R2 030 3/4FJIC	Connect flow control valve Port M to the existing tee at fan motor ① inlet.
Hose plugs	230	811-341C	PL 3/4MJIC	Cap drive ends of hoses Ⓕ and Ⓖ with plugs 230.
Load Sense hose	254	841-477C	HH1/4R2 140 9/16FJIC	Connect between sense adapter 217 and flow control valve Port LS.
Cooler Outlet hose	255	841-506C	HH1/2R2 030 3/4MJIC 3/4FJIC	Connect cooler ② outlet to existing fan return hose Ⓔ.
Hydraulic Drive Motor Return hose	258	841-556C	HH1/2R2 144 3/4FJIC	Connect the motor check valve to flow control valve Port T.
Hydraulic Drive Supply hose	258	841-556C	HH1/2R2 144 3/4FJIC	Connect flow control valve face Port P to filter inlet.
Pump Supply hose	268	841-956C	HH1 1/2R4 070 1 7/8FJIC	Connect the reservoir outlet to the pump inlet.

411-138A Hose Diagram

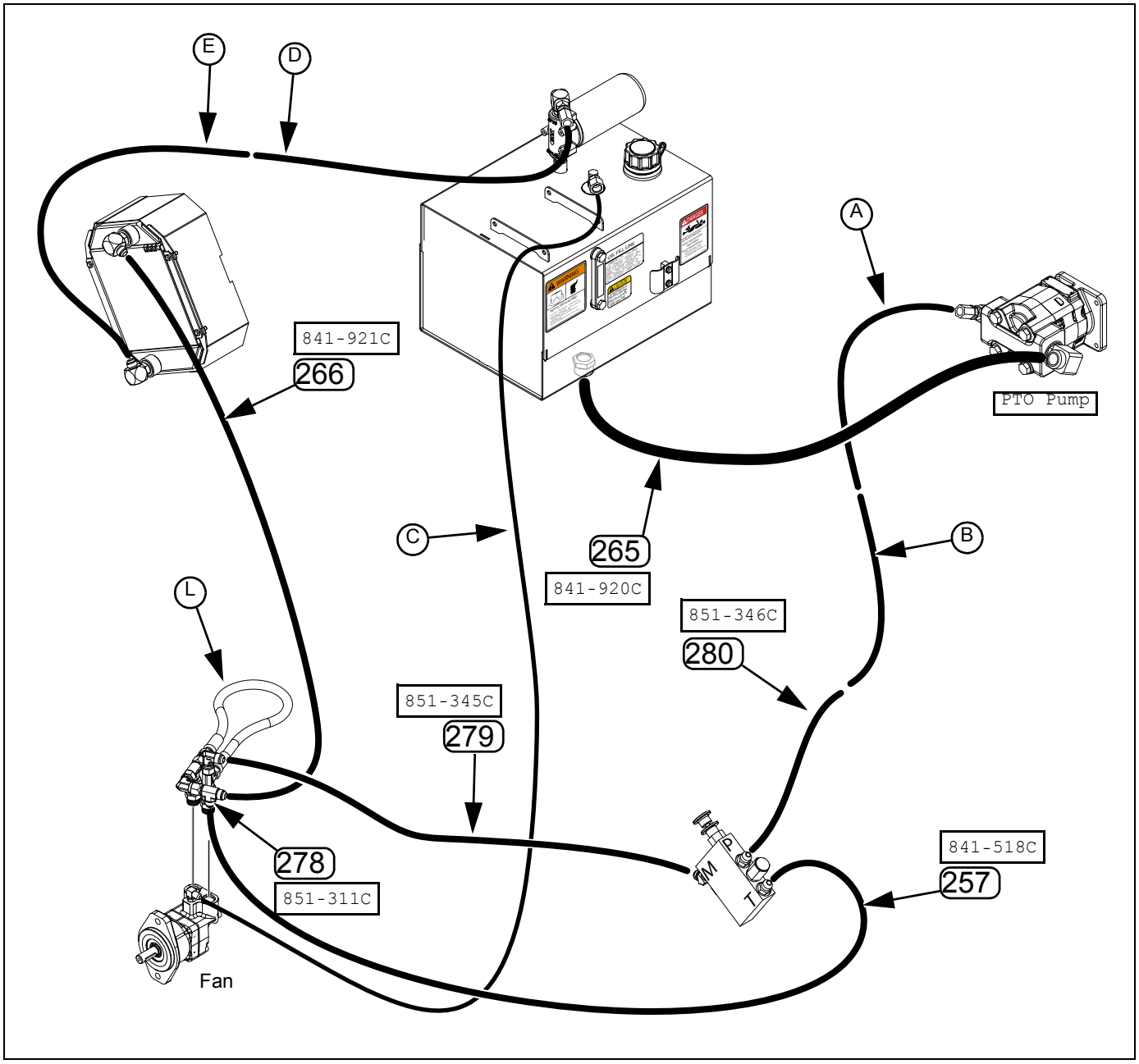

Figure 81: PTO Kit 411-138A Hose Routing
YP1625AHL

36374

411-138A Hose Diagram

Hydraulic Connections	Call-out	Part	Hose Description	Comments
Fan Pressure hose from hitch	Ⓐ, Ⓑ	Existing Hose(s)		Remove hose handles. Disconnect from fan. Reconnect hitch end to PTO pump outlet. Reconnect fan end to new hose 280.
Fan Case Drain hose	Ⓒ	Existing Hose(s)		Remove QD fittings at hitch end. Connect hitch end to reservoir case drain inlet.
Fan Return hose from hitch	Ⓓ, Ⓔ	Existing Hose(s)		Remove hose handles. Disconnect from fan. Reconnect hitch end to reservoir inlet. Reconnect rear end to cooler outlet.
Fan Bypass Loop	Ⓛ	Existing hose		Left in place.
Flow Control Return hose	257	841-518C	HH1/2R2 054 7/8FJIC	Connect flow control valve Port T to the new tee 278 at fan
Pump Supply Hose	265	841-920C	HH1 1/4R4 070 1 5/8FJIC	Connect reservoir outlet to pump inlet.
Fan Return to Cooler hose	266	841-921C	HH5/8R2 032 7/8FJIC	Connect the new tee 278 at the fan outlet to the cooler inlet.
Fan Return Tee	278	851-311C	TE 7/8MJIC 7/8MJIC 7/8FJIC	Add to existing elbow at fan outlet.
Fan Supply hose	279	851-345C	HH5/8R2 060 7/8FJIC	Connect flow control valve Port M to the existing elbow at the fan motor inlet.
Fan Supply Hose	280	851-346C	HH5/8R2 045 7/8FJIC 7/8MJIC	Connect flow control valve Port P to the existing fan pressure hose Ⓑ (fan end).

411-147A Hose Diagram

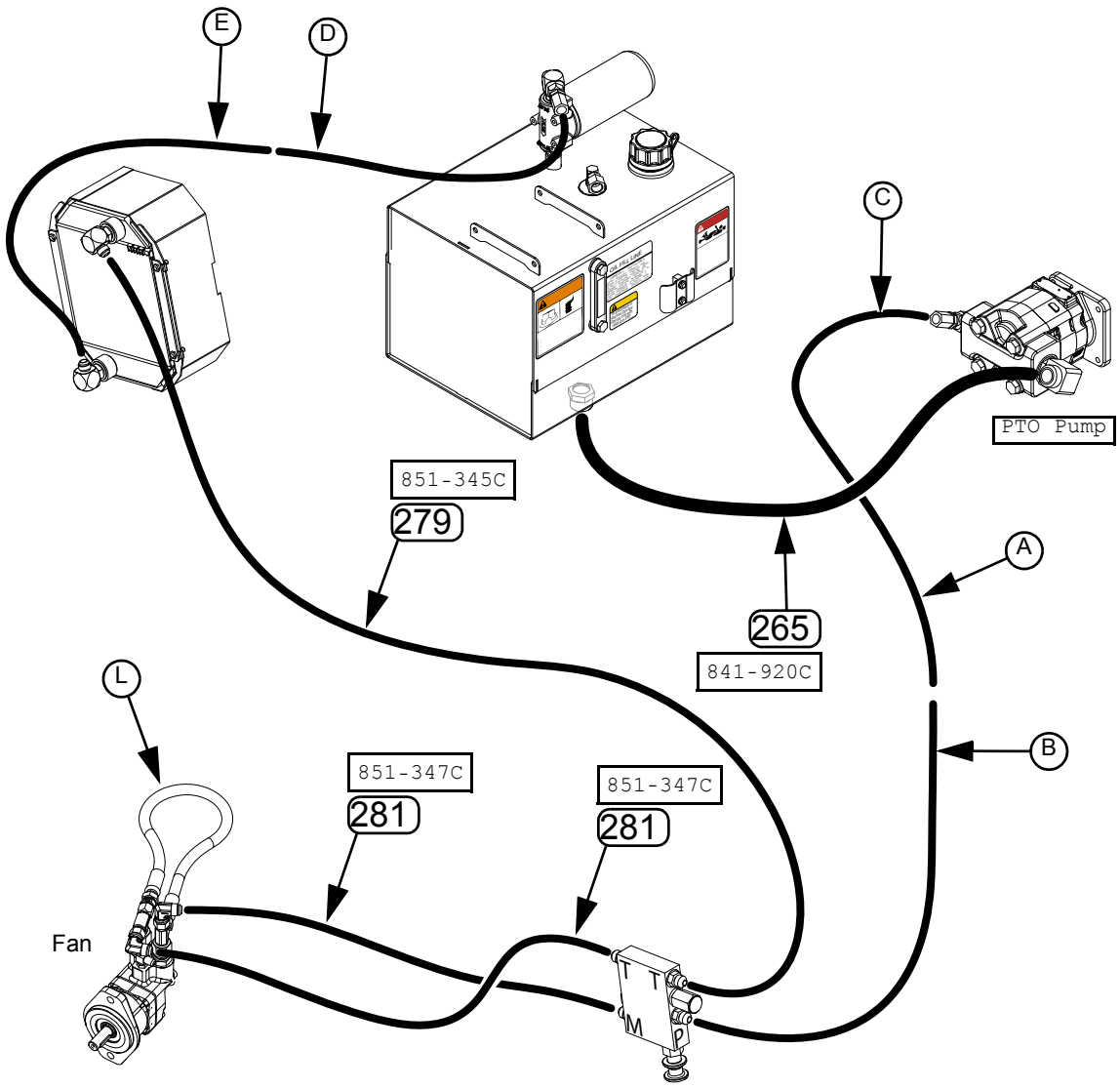

Figure 82: PTO Kit 411-147A Hose Routing
YP1625AHD

36375

411-147A Hose Diagram

Hydraulic Connections	Call-out	Part	Hose Description	Comments
Fan Pressure hose from hitch	Ⓐ, Ⓑ	Existing Hose(s)		Remove hose handles. Disconnect from fan. Reconnect hitch end to PTO pump outlet. Reconnect fan end to flow control valve Port P.
Fan Case Drain hose	Ⓒ	Existing Hose(s)		Remove QD fittings at hitch end. Connect hitch end to reservoir case drain inlet.
Fan Return hose from hitch	Ⓓ, Ⓔ	Existing Hose(s)		Remove hose handles. Disconnect from fan. Reconnect hitch end to reservoir inlet. Reconnect fan end to cooler outlet.
Fan Bypass Loop	Ⓛ	Existing hose		Left in place.
Pump Supply Hose	265	841-920C	HH1 1/4R4 070 1 5/8FJIC	Connect reservoir outlet to pump inlet.
Merged Return hose	279	851-345C	HH5/8R2 060 7/8FJIC	Connect flow control valve Port T to the cooler inlet.
Fan Supply Hose	281	851-347C	HH5/8R2 016 7/8FJIC	Connect flow control valve Port M to the existing elbow at the fan inlet.
Fan Return Hose	281	851-347C	HH5/8R2 016 7/8FJIC	Connect the existing elbow at the fan outlet to flow control Port T.

Close-Out

87. Remove any wired-on tags with part numbers, and wipe off any part numbers written in grease pencil.
88. Fill the system per “**Oil Fill**” on page 25.
89. Operate the system, performing an initial valve adjustment if possible. See “**Flow Control Page Reference**” on page 15.

Appendix R - Reference

Torque Values

Bolt Size	Bolt Head Identification					
	Grade 2		Grade 5		Grade 8	
in-tpi[a]	N-m[b]	ft-lb[d]	N-m	ft-lb	N-m	ft-lb
1/4-20	7.4	5.6	11	8	16	12
1/4-28	8.5	6	13	10	18	14
5/16-18	15	11	24	17	33	25
5/16-24	17	13	26	19	37	27
3/8-16	27	20	42	31	59	44
3/8-24	31	22	47	35	67	49
7/16-14	43	32	67	49	95	70
7/16-20	49	36	75	55	105	78
1/2-13	66	49	105	76	145	105
1/2-20	75	55	115	85	165	120
9/16-12	95	70	150	110	210	155
9/16-18	105	79	165	120	235	170
5/8-11	130	97	205	150	285	210
5/8-18	150	110	230	170	325	240
3/4-10	235	170	360	265	510	375
3/4-16	260	190	405	295	570	420
7/8-9	225	165	585	430	820	605
7/8-14	250	185	640	475	905	670
1-8	340	250	875	645	1230	910
1-12	370	275	955	705	1350	995
1 1/8-7	480	355	1080	795	1750	1290
1 1/8-12	540	395	1210	890	1960	1440
1 1/4-7	680	500	1520	1120	2460	1820
1 1/4-12	750	555	1680	1240	2730	2010
1 3/8-6	890	655	1990	1470	3230	2380
1 3/8-12	1010	745	2270	1670	3680	2710
1 1/2-6	1180	870	2640	1950	4290	3160
1 1/2-12	1330	980	2970	2190	4820	3560

Bolt Size	Bolt Head Identification					
	5.8 Class 5.8		8.8 Class 8.8		10.9 Class 10.9	
mm x pitch[c]	N-m	ft-lb	N-m	ft-lb	N-m	ft-lb
M 5 X 0.8	4	3	6	5	9	7
M 6 X 1	7	5	11	8	15	11
M 8 X 1.25	17	12	26	19	36	27
M 8 X 1	18	13	28	21	39	29
M10 X 1.5	33	24	52	39	72	53
M10 X 0.75	39	29	61	45	85	62
M12 X 1.75	58	42	91	67	125	93
M12 X 1.5	60	44	95	70	130	97
M12 X 1	90	66	105	77	145	105
M14 X 2	92	68	145	105	200	150
M14 X 1.5	99	73	155	115	215	160
M16 X 2	145	105	225	165	315	230
M16 X 1.5	155	115	240	180	335	245
M18 X 2.5	195	145	310	230	405	300
M18 X 1.5	220	165	350	260	485	355
M20 X 2.5	280	205	440	325	610	450
M20 X 1.5	310	230	650	480	900	665
M24 X 3	480	355	760	560	1050	780
M24 X 2	525	390	830	610	1150	845
M30 X 3.5	960	705	1510	1120	2100	1550
M30 X 2	1060	785	1680	1240	2320	1710
M36 X 3.5	1730	1270	2650	1950	3660	2700
M36 X 2	1880	1380	2960	2190	4100	3220

a. in-tpi = nominal thread diameter in inches-threads per inch
b. N· m = newton-meters
c. mm x pitch = nominal thread diameter in mm x thread pitch
d. ft-lb = foot pounds

Torque tolerance + 0%, -15% of torquingvalues. Unless otherwise specified use torquevalues listed above. 25199

Hydraulic Fitting Torque

Connector Identification

Refer to Figure 83 (a hypothetical fitting)

Leave any protective caps in place until immediately prior to making a connection.

① **NPT** - National Pipe Thread
Note tapered threads, no cone/flare, and no O-ring. Apply liquid pipe sealant for hydraulic applications (do not use tape sealant, which can foul filters).

② **JIC** - Joint Industry Conference (SAE J514)
Note straight threads ④ and the 37· cone ⑤ on “M” fittings (or 37· flare on “F” fittings). Use no sealants (tape or liquid) on JIC fittings.

③ **ORB** - O-ring Boss (SAE J514)
Note straight threads ⑤ and elastomer O-ring ⑦. Prior to installation, to prevent abrasion during tightening, lubricate O-ring with clean hydraulic fluid. Use no sealants (tape or liquid) on JIC fittings.
ORB fittings that need orientation, such as the ell depicted, also have a washer ⑧ and jam nut ⑨ (“adjustable thread port stud”). Back jam nut away from washer. Thread fitting into receptacle until O-ring contacts seat. Unscrew fitting to desired orientation. Tighten jam nut to torque specification.

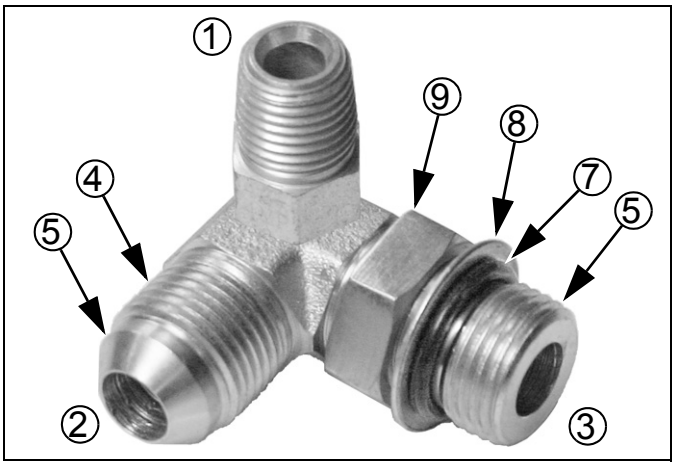

Figure 83: 31282
Hydraulic Connector ID

Fittings Torque Values

Fitting	Ft-Lbs	N-m
1/4 NPT	1.5-3.0 turns past finger tight	
9/16 JIC	18-20	24-27
9/16 ORB w/jam nut	12-16	16-22
9/16 ORB straight	18-24	24-32
3/4 JIC	27-39	37-53
3/4 ORB w/jam nut	20-30	27-41

Abbreviations

AD	adapter
ASABE	American Society of Agricultural and Biological Engineers
ASAE	American Society of Agricultural Engineers
ASSY	Assembly
BRKT	Bracket
CI	Cubic Inches
cm	Centimeters
CNTRL	Control
COMP	Compressor or Compensated
CP	Cap
CR	Cross
DJ	DICKEY-john®
DRV	Drive
EL	Elbow
FJIC	Female JIC
FORB	Female ORB
GR5,8	Grade 5, Grade 8
HEX	Hexagonal
HH	Hydraulic Hose
HHCS	Hex Head Cap Screw
hp	Horsepower
HWH	Hex Washer Head
HYD	Hydraulic
in., IN	Inch
JIC	Joint Industry Conference
kW	Kilowatts
LH	Left Hand
MJIC	Male JIC
mm, MM	Millimeter
MNT	Mount
MORB	Male ORB
N-m	Newton-meters
OD	Outside Diameter
ORB	R-Ring Boss
PL	Plug
PLT	Plated or Plate
PTO	Power Take-Off
QD	Quick Disconnect
RH	Right Hand
SAE	Society of Automotive Engineers (standard)
STL	Steel
SUS	Saybolt Universal Seconds
TE	Tee
USS	United States Standard
W	with
WLDMNT	Weldment
X	by
YP	Yield-Pro®

Parts

Manual, Kits, Options and Seals

c/o	Part Number	Part Description
101	411-015M	MAN INST/OP FLDG PLTR PTO PUMP
102	411-183A	PTO AIR COMP MNT ASSEMBLY
103	411-184A	YP12/16 2ND PTO AIR COMP MNT
104	411-185A	YP30,40,44,24 2ND PTO AIR COMP
105	810-901C	SEAL KIT, HYD PUMP PARKER 350C
106	810-902C	SEAL KIT, HYD PUMP PARKER 365C

Component Parts

c/o	Part Number	Part Description
107	401-143L	6IN HYD FAN COOLER 7/8MJIC
108	401-833L	6IN HYD FAN COOLER ASSY
109	401-834H	6 IN HYD FAN SHROUD
110	401-924L	8IN FAN COOLER ASSY 3/4MJIC
111	401-926L	8IN FAN COOLER ASSY 7/8MJIC
112	401-927L	HYD PUMP ASSY 3.19 CIR
113	401-928L	HYD PUMP ASSY 4.46 CIR
114	401-929L	HYD PUMP ASSY 5.40 CIR
115	401-930L	HYD PUMP ASSY 7.20 CIR
116	401-931L	YP24A CONTROL VALVE ASSY
117	401-932L	YP24 FAN CONTROL VALVE ASSY
118	401-957H	AIR COMPRESSOR MNT WIDE
119	401-958H	8IN FAN HYD OIL COOLER
120	401-959H	YP24A HYD RES TANK WLDMNT
121	401-960H	3PYP TANK WLDMNT
122	401-961H	YP12,16,44 HYD RES TANK WLDMNT
123	401-962H	YP30,40,24 AIR COMP TANK MNT
124	401-963H	YP30,40 HYD RES WLDMNT
125	401-965S	YP12,16,44 HYD RES BASE ASSY
126	401-966S	YP30,40 HYD RES BASE ASSY
127	401-967S	3PYP PTO TANK BASE ASSY
128	401-968S	YP24A HYD RES BASE ASSY
129	401-970L	YP30,40 HYD RES ASSY
130	401-971L	YP12,16,44 HYD RES ASSY
131	401-972L	3PYP PTO TANK ASSY
132	401-973L	YP24A YD RES ASSY
133	401-974H	PTO PUMP STORAGE MNT
134	401-975L	YP12,16 HYD DRV FLOW CNTRL
135	401-976L	YP12,16 GRND DRV FLOW CNTRL
136	401-977L	YP12A,16A GRND DRV FLOW CNTRL
137	401-978L	YP1630F PTO FLOW MNT ASSY
138	401-979L	3PYP PTO FLOW CNTRL GND DRV
139	401-980L	3PYP PTO FLOW CNTRL HYD DRV
140	401-981H	3PYP PTO PUMP MNT WLDMNT
141	401-982V	3PYP PTO PUMP STORAGE MNT
142	401-983V	YP12,16 HYD DRV PTO HOSE BNDL
143	401-984V	YP12A,16A HYD DRV PTO HOSE BDL
144	401-985V	YP12,16 GRND DRV PTO HOSE BNDL
145	401-986V	YP12A,16A DRV PTO HOSE BNDL
146	401-987V	YP16F PTO HOSE BNDL
147	401-988V	3PYP HYD DRV PTO HOSE BNDL
148	401-989V	3PYPA HYD DRV PTO HOSE BNDL
149	401-990V	3PYP GRND DRV PTO HOSE BNDL
150	401-991V	3PYPA GRND DRV PTO HOSE BNDL
151	401-992V	YP24 PTO HOSE BNDL
152	401-993V	YP24A PTO HOSE BNDL
153	401-994V	YP30,40 PTO HOSE BNDL
154	401-995V	YP30A,40A PTO HOSE BNDL
155	401-996V	YP44A PTO HOSE BNDL
156	411-003S	YP12A,16A PTO CNTRL VALVE ASSY
157	411-004L	YP30,40 PTO FLOW CONTROL
158	411-013V	YP24F PTO PUMP HYD HOSE BUNDLE
159	411-142L	YP16AHD PTO FLOW CONTROL
160	411-144V	YP16AHL PTO HOSE BUNDLE
161	411-145L	YP16AHL PTO FLOW CONTROL
162	411-146V	YP16AHD PTO HOSE BUNDLE
163	421-135D	YP 24 HYD CNTRL VALVE MNT PLT
164	421-136D	YP24 HYD VALVE REAR MNT PLT
165	421-159D	YP12,16 PTO VALVE MNT PLT
166	421-161D	CONTROL VALVE MNT PLT
167	421-162D	YP1630F PTO FLOW VALVE MNT PLT
168	421-163D	3PYP HYD VALVE MNT PLT
169	421-166D	PTO PUMP TORQUE PLT
170	421-173D	PTO TANK AIR COMP MNT PLT
171	421-174D	YP30,40 PTO FLOW CONTROL MNT
172	421-563D	YP16AHL PTO FLOW MNT PLT
173	421-615D	CRARY 8IN FAN SCREEN EXT
174	502-068D	HYD HOSE CLAMP BRACKET
175	800-120C	NUT CLIP U-TYPE 5/16-18
176	802-004C	HHCS 1/4-20X3/4 GR5
177	802-007C	HHCS 5/16-18X3/4 GR5
178	802-017C	HHCS 3/8-16X1 GR5
179	802-022C	HHCS 3/8-16X1 1/2 GR5
180	802-041C	HHCS 1/2-13X3 1/2 GR5
181	802-115C	HHCS 5/16-18X2 GR5
182	802-128C	HHCS 1/2-13X2 GR5
183	802-138C	HHCS 5/16-18X2 1/4 GR5
184	802-159C	HHCS 5/16-18X1 GR5
185	802-251C	RHSNB 5/16-18X2 1/4 GR5
186	802-269C	HHCS 1/2-13X9 GR5
187	802-390C	HHCS 5/16-18X3 1/4 GR5
188	802-800C	HWH #12-14X3/4
189	803-006C	NUT HEX 1/4-20 PLT
190	803-008C	NUT HEX 5/16-18 PLT
191	803-014C	NUT HEX 3/8-16 PLT
192	803-020C	NUT HEX 1/2-13 PLT
193	803-043C	NUT HEX WHIZ 5/16-18 PLT
194	803-147C	NUT HEX NYLOCK 1/2-13

c/o	Part Number	Part Description
195	804-006C	WASHER LOCK SPRING 1/4 PLT
196	804-009C	WASHER LOCK SPRING 5/16 PLT
197	804-013C	WASHER LOCK SPRING 3/8 PLT
198	804-015C	WASHER LOCK SPRING 1/2 PLT
199	804-016C	WASHER FLAT 1/2 SAE PLT
200	804-036C	WASHER FLAT 5/16 SAE PLT
201	806-026C	U-BOLT 1/2-13 X 7 1/32 X 8 1/4
202	806-067C	U-BOLT 1/2-13 X 6 1/32 X 4 1/4
203	806-138C	U-BOLT 3/8-16 X 4 1/32 X 3 3/4
204	810-804C	C12 HYD OIL COOLER
205	810-893C	HYD PUMP PARKER 350C 4.46 CIR
206	810-894C	C18 HYD OIL COOLER
207	810-895C	HYD PUMP PARKER 365C 5.40CIR
208	810-896C	HYD PUMP PARKER 365C 7.20CIR
209	810-897C	HYD PUMP PARKER 350C 3.19CIR
210	810-898C	PRESS COMP FLOW CNTRL SHTLE
211	810-899C	PRES COMP FLOW CNTRL
212	811-065C	EL 9/16MJIC 9/16MORB
213	811-073C	TE 3/4MJIC 3/4MJIC 3/4FJIC
214	811-079C	TE 3/4FJIC 3/4MJIC 3/4MJIC
215	811-081C	EL 7/8MORB 3/4MJIC
216	811-091C	EL 3/4MJIC 1 1/16MORB
217	811-146C	AD 3/4FJIC 9/16MJIC
218	811-147C	CR 3/4MJIC
219	811-150C	EL 3/4FJIC 3/4MJIC
220	811-171C	EL 3/4MORB 9/16MJIC
221	811-192C	AD 3/4MJIC 7/8MORB
222	811-216C	EL 3/4MJIC 9/16MORB
223	811-279C	HH1/2R2 060 3/4FJIC
224	811-269C	HH1/2R2 036 3/4FJIC
225	811-279C	HH1/2R2 060 3/4FJIC
226	811-291C	HH1/2R2 072 3/4FJIC
227	811-324C	AD 3/4MORB 3/4FJIC
228	811-331C	HH1/2R2 020 3/4FJIC
229	811-340C	HH1/2R2 030 3/4FJIC
230	811-341C	PL 3/4MJIC
231	811-348C	AD 3/4MJIC 3/4FORB
232	811-488C	AD 3/4FORB 3/4FORB
233	811-665C	HH1/2R2 208 3/4FJIC
234	811-757C	PL 9/16MORB HOLLOW HEX
235	811-780C	HH1/2R2 094 3/4FJIC
236	811-830C	HH1/2R2 084 3/4FJIC
237	811-857C	PL 3/4MORB
238	811-862C	CP 9/16FJIC
239	818-240C	DECAL CAUTION 1000 RPM
240	826-777C	1 3/4-20 PTO COUPLER
241	826-778C	1 3/8-21 PTO COUPLER
242	833-492C	7-PIN CONNECTOR HOLDER
243	841-066C	AD 3/4FJIC 3/4FJIC UNION
244	841-077C	EL 3/4FJIC 3/4MORB
245	841-171C	HH1/4R2 075 9/16FJIC
246	841-196C	HH1/2R2 024 3/4FJIC
247	841-249C	HH1/2R2 108 3/4FJIC
248	841-273C	CP 3/4FJIC
249	841-314C	EL 45 7/8MORB 7/8MJIC

c/o	Part Number	Part Description
250	841-320C	AD 7/8MORB 7/8MJIC
251	841-374C	HH1/4R2 085 9/16FJIC
252	841-389C	HH1/4R2 095 9/16FJIC
253	841-397C	HH1/4R2 115 9/16FJIC
254	841-477C	HH1/4R2 140 9/16FJIC
255	841-506C	HH1/2R2 030 3/4MJIC 3/4FJIC
256	841-517C	HH1/2R2 054 3/4FJIC
257	841-518C	HH1/2R2 054 7/8FJIC
258	841-556C	HH1/2R2 144 3/4FJIC
259	841-577C	HH1/2R2 136 3/4FJIC
260	841-915C	CR 7/8MJIC
261	841-916C	EL 1 1/16MORB 7/8MJIC
262	841-917C	TE 7/8MORB 3/4MJIC 3/4MJIC
263	841-918C	AD 1 1/16MORB 7/8FJIC
264	841-919C	AD 7/8FJIC 3/4MORB
265	841-920C	HH1 1/4R4 070 1 5/8FJIC
266	841-921C	HH5/8R2 032 7/8FJIC
267	841-922C	HH1/2R2 036 7/8FJIC 3/4FJIC
268	841-956C	HH1 1/2R4 070 1 7/8FJIC
269	841-959C	PL 7/8MORB HOLLOW HEX
270	841-973C	EL 1 5/16MORB 3/4MJIC
271	841-974C	EL 1 5/8MORB 1 5/8MJIC
272	841-975C	EL 1 5/16MORB 7/8MJIC
273	841-978C	EL 1 7/8MORB 1 7/8MJIC
274	841-985C	HH1 1/4R4 120 1 5/8FJIC
275	841-986C	HH1 1/4R4 080 1 5/8FJIC
276	841-996C	HH1 1/4R4 48 1.63MJIC 1.63FJIC
277	841-997C	HH1.5R4 48 1 88 JIC 1.88F JIC
278	851-311C	TE 7/8MJIC 7/8MJIC 7/8FJIC
279	851-345C	HH5/8R2 060 7/8FJIC
280	851-346C	HH5/8R2 045 7/8FJIC 7/8MJIC
281	851-347C	HH5/8R2 016 7/8FJIC
282	858-004C	DECAL HOT FLUID PTO RES
283	858-029C	DECAL 13.5GAL OIL FILL LINE
284	858-030C	DECAL DANGER PTO SHFT MNT PUMP
285	891-109C	FILTER HEAD
286	891-315C	5IN HYD SIGHT LEVEL GAUGE
287	891-316C	HYD FILL CAP WITH SCREEN
288	891-385C	FILTER SPIN ON 10 MICRON
289	NPN	HHCS #10-24x1 INCH GR8 FULL THD
290	NPN	HSHCS 1/2-13X1 1/2 GR5
291	NPN	HSHCS 5/8-11X1 3/4 GR5
292	NPN	3/8-16X1/2 SOCKET HEAD SET SCREW
293	NPN	5/16-18X3/8 SOCKET HD SET SCREW
294	421-928D	PIN 5/8X7 USEABLE
295	805-117C	PIN ROLL 1/4X2 1/2 PLT
296	421-923D	PIN 5/8X8 1/2 USEABLE HEADLESS
297	421-921D	PUMP MOUNTING BASE PLATE
298	421-929D	PUMP OFFSET PLATE
299	802-106C	RHSNB 1/2-13X1 1/2 GR 5
300	804-016C	WASHER FLAT 1/2 SAE PLT
301	804-015C	WASHER LOCK SPRING 1/2 PLT
302	803-020C	HEX NUT 1/2-16 PLT
303	411-334H	PTO PUMP MOUNT TOP ADJUSTMENT
304	805-123C	PIN HAIR COTTE .120 PLT

c/o	Part Number	Part Description
305	411-333H	BOTTOM BRACKET
306	421-922D	TRACTOR STRAP MOUNTING PLATE
307	163-096D	WASHER 5/8ID X 20D X .25 THICK

Existing Parts Affected

Call-out	Part Number	Part Description
11	<none>	HHCS #10-24x1 INCH GRADE 8 FULL THREAD
12	17089	13 FAN IMPELLER
13	21121	6 FAN HOUSING RH SIDE
14	23320	6 FAN HOUSING LH SIDE
15	23907	HUB/MOTOR PLATE SEAL (2B)
16	401-203H	YP FAN MOUNT WLDMNT 2
17	401-537D	DJ FAN SENSOR MOUNT BRKT
18	401-656H	FAN MOUNT WELDMENT
19	403-550D	BRACKET SPEED SENSOR CRARY 8IN
20	800-373C	SQ KEY 6MM X 35MM
21	801-081C	SCREW HEX SELF TAP 1/4-20X3/4
22	802-005C	HHCS 1/4-20X1 GR5
23	802-079C	HHCS 3/8-16X1 1/4 GR5
24	802-086C	HHCS 3/4-10X2 3/4 GR5
25	802-167C	HHCS 1/4-20X1 1/2 GR5
26	802-224C	HHCS 1/4-20X1 1/4 GR5
27	802-800C	HWH #12-14X3/4
28	803-014C	NUT HEX 3/8-16 PLT
29	803-027C	NUT HEX 3/4-10 PLT
30	803-230C	NUT HEX FLANGE 1/4-20 PLT
31	803-360C	NUT HEX FLG 3/8-16 GR8 ZNYCR
32	804-006C	WASHER LOCK SPRING 1/4 PLT
33	804-011C	WASHER FLAT 3/8 USS PLT
34	804-012C	WASHER FLAT 3/8 SAE PLT
35	804-013C	WASHER LOCK SPRING 3/8 PLT
36	804-023C	WASHER LOCK SPRING 3/4 PLT
37	804-075C	WASHER FLAT 1/4 USS PLT
38	810-037C	VALVE LINE CHECK
39	810-556C	PARKER F-11 FAN MOTOR
40	811-077C	TE 3/4MORB 3/4MJIC 3/4MJIC
41	811-078C	TE 3/4MJIC
42	811-080C	TE 3/4MJIC 3/4MORB 3/4MJIC
43	811-088C	AD 3/4MORB 3/4MJIC
44	811-150C	EL 3/4FJIC 3/4MJIC
45	811-266C	HH1/2R2 192 3/4FJIC
46	811-331C	HH1/2R2 020 3/4FJIC
47	811-740C	HH1/4R2 178 9/16FJIC
48	811-782C	HH1/2R1 024 3/4FJIC 3/4MORB
49	811-812C	HH1/4R2 228 9/16FJIC
50	811-842C	HH1/2R2 150 3/4FJIC
51	811-846C	HH1/2R2 174 3/4FJIC
52	811-957C	HH1/4R2 303 9/16FJIC
53	817-624C	FAN INLET RAIN SHIELD
54	841-057C	HH1/2R2 304 3/4FJIC

Call-out	Part Number	Part Description
55	841-163C	HH1/2R2 365 3/4MORB 3/4FJIC
56	841-196C	HH1/2R2 024 3/4FJIC
57	841-198C	HH1/2R2 180 3/4FJIC 3/4MORB
58	841-199C	HH1/2R2 184 3/4FJIC
59	841-200C	HH1/2R2 244 3/4FJIC 3/4MORB
60	841-211C	HH1/2R2 432 3/4MORB 3/4FJIC
61	841-217C	HH1/4R2 434 9/16FJIC 9/16MORB
62	841-333C	HH5/8R2 432 3/4MORB 7/8FJIC
63	841-334C	HH5/8R2 312 7/8FJIC
64	841-337C	TE 1 1/16MORB 7/8MJIC 7/8MJIC
65	841-459C	HH1/4R2 162 9/16FJIC
66	841-460C	HH1/2R2 174 3/4MORB 3/4FJIC90
67	890-624C	SCREEN FAN COVER
68	890-891C	BUSHING, JA X 20 MM
69	890-899C	VOLVO HYD MOTOR MOUNT PLT
70	VER-2584	VERIS HYD HS 8M3K-8FJX90S-8FJX
71	VER-5211	VERIS HYD LINE STL .5 OD X.049

Index

A
abbreviation 89
acceleration, sudden 15
adaptor 2, 13
air compressor 30
Air-Pro® 8
Air-Pro® gauge 20
alert symbol, PTO 1
ASABE 8
ASAE 8
C
callouts 7, 27
capacity, oil 6, 26
capacity, system 25
CAUTION, defined 1
check for leaks 15
clearance, PTO pump 8, 9
clevis 8, 9
closed center 6
clothing 2
compatibility 28
compressor 43
compressor, air 30
cooler, oil 6
coupler 2, 11, 13
D
DANGER, defined 1
decal replacement 4
decals
caution
1000 RPM PTO 5
danger
rotating driveline 4
warning
hot fluid 5
decal, safety 4
DICKEY-john® 17, 21
drain plug 25
drawbar clearance 8, 9
driveline 2, 13
E
ear protection 15
entanglement 1
existing parts 92
extender 2
extension hose 51
extension, shaft 13
external gearbox 13
F
fan 32
fill level 14
filler cap 25
filter change 25
filter, oil 26
fire 3
flailing 1
Fleetguard 26
flow control valve 6, 14, 15, 45
G
gearbox 2
gearbox, external 13
ground clearance 8, 9
ground drive 18, 19, 20, 22
H
hair 2
HE-10L, filter 26
HF6611, filter 26
high pressure fluid 1
high pressure fluids 3
hitch 30
hoist 27
hose, extension 51
hp 8
hydraulic connectors 88
hydraulic drive 17, 21
hydraulic oil 25
hydraulic safety 3
hydraulic steering 28
I
independent 8
independent PTO 2
inlet shutter 19
IntelliAg® 17
J
JIC 88
Joint Industry Conference 88
J514 88
K
knob 14, 17, 18, 19, 20, 21, 22
kW 8
L
leak checks 15
left-hand (defined) 7
letter assignments 50
level 14
lift 27
live 8
live PTO 2
lock disc 14, 17, 18, 19, 20, 21, 22
lubrication 26
M
maintenance 26
maintenance safety 3
markers 29
master shield 2, 8, 9
medical assistance 3
N
National Pipe Thread 88
noise 15
Note (defined) 7
Notice (defined) 7
NPT 88
O
oil 25
oil cooler 6
oil fill level 14
oil filter 25
oil reservoir 6
oil specification 25, 26
oil temperature 14, 25
oil, hydraulic 26
open center 6
Operation 8
options 29
ORB 88
order of installation 29
O-Ring Boss 88
P
parts 90
plug, drain 25
power, PTO 8
Prepare the PTO Pump 9
prepare the PTO pump
assembling the pumping mount assembly 10
install coupler 11
installing the pump mounting assembly 11
pump fittings 9
PROBOX® 29
PTO alert symbol 1
PTO maintenance 25
PTO operation 8
tractor requirements 8
PTO pump 6
PTO safety 2
PTO speed 15
PTO, defined 6
pump 14
pump, PTO 6
R
rain cover 19
Range sprocket 19
reservoir 41
reservoir, oil 6
right-hand (defined) 7
Row-Pro™ 6, 30

S
SAE J514 88
safety decal 4
safety symbol 1
scarf 2
scheduled maintenance 26
seed disk 19
Seed Manager SE 28
seed, load 19
sensor 33, 38
serial number 28
shaft diameter 8
shaft extension 13
shaft, PTO 2
shutter, inlet 19
side PTO 2
sight gauge 14
Singulator Plus™ 8
slide gate 19
specification, oil 25
speed, PTO 15
spline 2, 8
stub shaft 8
sudden acceleration 15
SUS 25, 26
Swath Command™ 6, 31
symbol, alert, PTO 1
symbol, safety 1
system capacity 25
T
tables
fittings torque 88
tags 86
temperature, oil 14, 25
three-point 12
tools 27
torque values 87
Transmission sprocket 19
troubleshooting 24
Type 1 8
Type 1 PTO 27
Type 2 8
Type 3 ..... 8, 9
U
unhitching 23
V
VER-2584, hose 63, 65
VER-5211, hose 63, 65
W
WARNING, defined 1
Y
YP1220 ..... 18, 28, 43, 46
YP1225 46
YP1225A 47
YP1225A#55 ..... 18, 28
YP1225A#56 ..... 17, 28
YP1225/A 43
YP1225#55 ..... 18, 28
YP1225#56 ..... 21, 28
YP1625 46
YP1625A 47
YP1625A#55 ..... 18, 28
YP1625A#56 ..... 17, 28
YP1625/A 43
YP1625#55 ..... 18, 28
YP1625#56 ..... 21, 28
YP1630F 18, 22, 28, 29, 47
YP2425 ..... 8, 21, 28, 48
YP2425A 17, 28, 48
YP2425F 21, 28, 29, 32, 36, 48
YP2425/A/F 32, 43
YP3010HDP 21, 28, 43, 49
YP3020P 21
YP3025 ..... 21, 28, 49
YP3025A 49
YP3025A/AR 17, 28
YP3025/A, ... 43
YP4010HDP 21, 28, 43, 49
YP4020P 21
YP4025 ..... 21, 28, 49
YP4025A 49
YP4025A/AR 17, 28
YP4025F 21, 28, 29
YP4025/A/F 43
YP425A 29
YP425A3P 29
YP4425A 17, 28, 31, 49
YP625A 29
YP625A3P 29
YP825A 29
YP825AR 29
YP825A3P 29
Z
Zinga 26
Symbols
#55, ground drive 15
#56, hydraulic drive 15
Numerics
1000 rpm 2
1625AHD 16, 20, 28, 47
1625AHD/L 43
1625AHL 16, 28, 50
2025A 29
2525A 29
3-point 12
3PYP 42, 48
3PYPA 42, 48
3PYPA#55 ..... 18, 28
3PYPA#56 ..... 17, 28
3PYP#55 ..... 18, 28
3PYP#56 ..... 21, 28
401-143L, cooler 33, 36, 40
401-143L, cooler asy 35
401-537D, bracket 33
401-833L, cooler 33
401-833L, cooler asy 35
401-834H, shroud 35
401-845A, kit 52, 54
401-885M, manual 6
401-924L, cooler 33
401-926L, cooler 33
401-931L, valve 48
401-932L, valve 48, 49
401-934A, kit 15, 28, 46, 52
401-935A, kit 15, 28, 47, 54
401-936A, kit 15, 28, 46, 56
401-937A, kit 15, 28, 47, 58
401-938A, kit 15, 28, 47, 60
401-939A, kit 16, 28, 42, 48, 62
401-940A, kit 16, 28, 42, 48, 64
401-941A, kit 16, 28, 42, 48, 66
401-942A, kit 16, 28, 42, 68
401-943A, kit 15, 28, 48, 70
401-944A, kit 15, 28, 48, 72
401-945A, kit 15, 16, 28, 49, 74
401-946A, kit 16, 28, 49, 76
401-951A, kit 16, 28, 49, 78
401-957H, mount 44
401-958H, shroud 38
401-962H, mount 44
401-970L, reservoir 41
401-971L, reservoir 41
401-972L, reservoir 42
401-973L, reservoir 41
401-975L, valve 46
401-976L, valve 46
401-977L, valve 47
401-978L, valve 47
401-979L, valve 48
401-980L, valve 48
411-003S, valve 47
411-004L, valve 49
411-014A, kit 15, 28, 32, 36, 48, 80
411-020M, manual 20
411-138A, kit 16, 28, 50, 82
411-142L, valve 47
411-145L, valve 50
411-147A, kit 16, 28, 47, 84
411-183A, mount kit 6, 43
411-184A, mount kit 6, 43, 44
411-185A, mount kit 6, 43, 44
421-136D, plate 48, 49
421-173D, mount 43
6-inch fan 33
8-inch fan 33, 38
802-017C, bolt 43, 44, 47
802-022C, bolt 46
802-079C, bolt 46
802-086C, bolt 48

802-128C, bolt 41
802-159C, bolt 35, 36
802-269C, bolt 42
802-390C, bolt 48, 49
803-008C, nut 48, 49
803-014C, nut 43, 44, 46, 47
803-020C, nut 41, 50
803-027C, nut 48
803-043C, nut 38, 40
803-147C, nut 42, 49
804-009C, washer 48, 49
804-012C, washer 46
804-013C, washer 43, 44, 46, 47
804-015C, washer 41, 50
804-016C, washer 41
804-023C, washer 48
806-026C, U-bolt 49
806-067C, U-bolt 50
806-138C, U-bolt 47
810-804C, cooler 35, 36
811-073C, tee .53, 55, 71, 73, 75, 77, 79, ...81
811-073C. tee 65
811-077C, tee 55, 59, 77, 79, 81
811-078C, tee 63, 67, 71
811-079C, tee 75
811-080C, tee 69
811-080C. tee 65
811-146C, adaptor 53, 55, 65, 71, 73, 75, ...77, 79, 81
811-147C, cross ... 55, 59, 65, 67, 69, 71, ...75, 77, 79, 81
811-268C, hose .... 39, 55, 59, 65, 69, 75, ...77, 79, 81
811-269C, hose 61, 63, 67, 71
811-279C, hose 61
811-291C, hose 75
811-324C, adaptor ..55, 59, 65, 77, 79
811-331C, hose 53, 55, 71, 73, 77, 79
811-340C, hose 81
811-341C, plug ..... 53, 55, 73, 75, 77, 79, ...80, 81
811-488C, adaptor 63, 65, 67, 69
811-665C, hose 67
811-740C, hose 63, 67
811-780C, hose 53
811-782C, hose 71, 73
811-812C, hose 65, 69
811-830C, hose 77, 79
811-842C, hose 65, 69
811-862C, cap 63, 65, 67
818-240C, decal 5
826-777C, coupler 2, 6, 11
826-778C, coupler 2, 6, 11
841-057C, hose 71
841-066C, adaptor 75
841-171C, hose 75
841-196C, hose ....53, 55, 57, 59, 63, 65, ...71, 73, 75
841-198C, hose 63, 65
841-199C, hose 63, 67
841-200C, hose 63, 67
841-211C, hose 71
841-217C, hose 71, 73
841-249C, hose 55, 63
841-273C, cap 63, 65, 67, 69
841-333C, hose 73
841-334C, hose 39, 73
841-337C, tee 73
841-374C, hose 77, 79
841-389C, hose 53
841-397C, hose 55, 63, 65
841-459C, hose 69
841-460C, hose 65, 69
841-477C, hose 71, 73, 81
841-506C, hose ....39, 55, 59, 61, 77, 79, ...81
841-517C, hose 53, 57
841-518C, hose 83
841-556C, hose 71, 73, 81
841-915C, cross 73
841-918C, adaptor 73
841-919C, adaptor 63, 65, 67, 69
841-920C, hose ....53, 55, 57, 59, 61, 71, ...75, 79, 83, 85
841-921C, hose 39, 73, 83
841-922C, hose 63, 65, 67, 73
841-956C, hose 73, 81
841-985C, hose 63, 65, 67, 69
841-986C, hose 77
841-996C, hose 6, 51
841-997C, hose 6, 51
851-311C, tee 82, 83
851-345C, hose 83, 85
851-346C, hose 83
851-347C, hose 85
858-004C, decal 5
858-029C, decal 14, 25
858-030C, decal 4
858-208C, decal 20
891-385C, filter 26

Great Plains

"Harvest Starts Here."

Great Plains, Mfg.
1525 E. North St.
P.O. Box 5060
Salina, KS 67402